FOREWORD

This wiring diagram manual has been prepared to provide information on the electrical system of the 1995 CELICA.

Applicable models: AT200 Series
ST204 Series

For service specifications and repair procedures of the above models other than those listed in this manual, refer to the following manuals:

Manual Name	Pub. No.
• 1995 CELICA Repair Manual Volume 1 Volume 2 • 1995 Model New Car Features	 RM411U1 RM411U2 NCF109U

All information in this manual is based on the latest product information at the time of publication. However, specifications and procedures are subject to change without notice.

TOYOTA MOTOR CORPORATION

NOTICE

When handling supplemental restraint system components (removal, installation or inspection, etc.), always follow the direction given in the repair manuals listed above to prevent accidents and supplemental restraint system malfunction.

INTRODUCTION

This manual consists of the following 11 sections:

No.	Section	Description
A	INDEX	Index of the contents of this manual.
	INTRODUCTION	Brief explanation of each section.
B	HOW TO USE THIS MANUAL	Instructions on how to use this manual.
C	TROUBLE–SHOOTING	Describes the basic inspection procedures for electrical circuits.
D	ABBREVIATIONS	Defines the abbreviations used in this manual.
E	GLOSSARY OF TERMS AND SYMBOLS	Defines the symbols and functions of major parts.
F	RELAY LOCATIONS	Shows position of the Electronic Control Unit, Relays, Relay Block, etc. This section is closely related to the system circuit.
G	ELECTRICAL WIRING ROUTING	Describes position of Parts Connectors, Splice points, Ground points, etc. This section is closely related to the system circuit.
H	POWER SOURCE (Current Flow Chart)	Describes power distribution from the power supply to various electrical loads.
I	INDEX	Index of the system circuits.
	SYSTEM CIRCUITS	Electrical circuits of each system are shown from the power supply through ground points. Wiring connections and their positions are shown and classified by code according to the connection method. (Refer to the section, “How to use this manual”). The “System Outline” and “Service Hints” useful for troubleshooting are also contained in this section.
J	GROUND POINTS	Shows ground positions of all parts described in this manual.
K	OVERALL WIRING DIAGRAM	Provides circuit diagrams showing the circuit connections.

This manual provides information on the electrical circuits installed on vehicles by dividing them into a circuit for each system.

The actual wiring of each system circuit is shown from the point where the power source is received from the battery as far as each ground point. (All circuit diagrams are shown with the switches in the OFF position.)

When troubleshooting any problem, first understand the operation of the circuit where the problem was detected (see System Circuit section), the power source supplying power to that circuit (see Power Source section), and the ground points (see Ground Points section). See the System Outline to understand the circuit operation.

When the circuit operation is understood, begin troubleshooting of the problem circuit to isolate the cause. Use Relay Location and Electrical Wire Routing sections to find each part, junction block and wiring harness connectors, wiring harness and wiring harness connectors, splice points, and ground points of each system circuit. Internal wiring for each junction block is also provided for better understanding of connection within a junction block.

Wiring related to each system is indicated in each system circuit by arrows (from __ , to __). When overall connections are required, see the Overall Wiring Diagram at the end of this manual.

* The system shown here is an EXAMPLE ONLY. It is different to the actual circuit shown in the SYSTEM CIRCUITS SECTION.

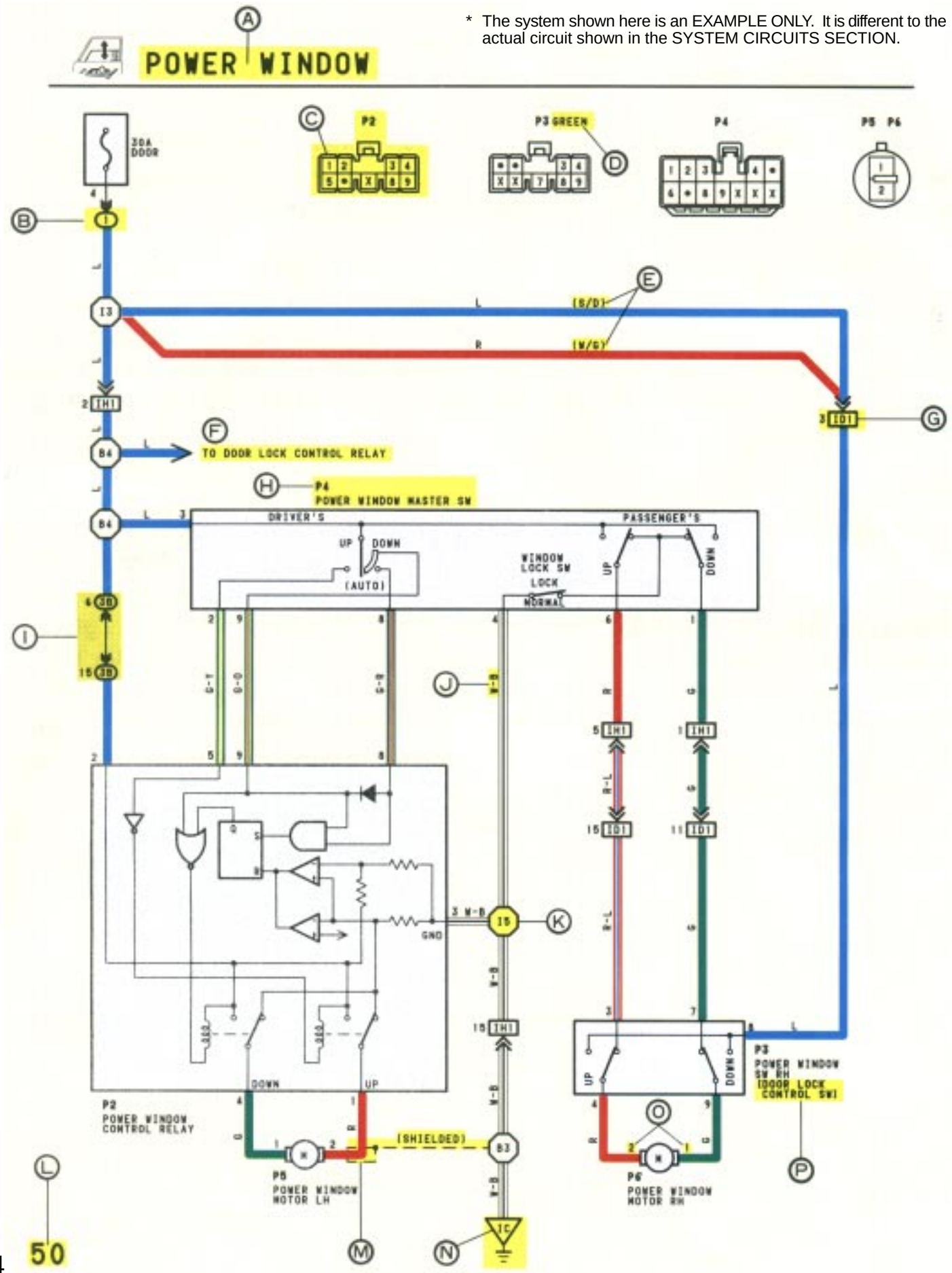

Ⓐ : System Title

Ⓑ : Indicates a Relay Block. No shading is used and only the Relay Block No. is shown to distinguish it from the J/B.

Example: Indicates Relay Block No. 1.

Ⓒ : Indicates the connector to be connected to a part (the numeral indicates the pin No.)

Explanation of pin use.

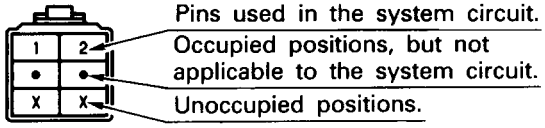

The pins shown are only for the highest grade, or only include those in the specification.

Ⓓ : Connector Color

Connectors not indicated are milky white in color.

Ⓔ : ( ) is used to indicate different wiring and connector, etc. when the vehicle model, engine type, or specification is different.

Ⓕ : Indicates related system.

Ⓖ : Indicates the wiring harness and wiring harness connector. The wiring harness with male terminal is shown with arrows (⩔).

Outside numerals are pin numbers.

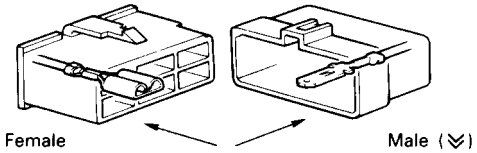

The first letter of the code for each wiring harness and wiring harness connector(s) indicates the component's location, e.g., "E" for the Engine Compartment, "I" for the Instrument Panel and Surrounding area, and "B" for the Body and Surrounding area.

When more than one code has the first and second letters in common, followed by numbers (e.g., IH1, IH2), this indicates the same type of wiring harness and wiring harness connector.

Ⓗ : Represents a part (all parts are shown in sky blue). The code is the same as the code used in parts position.

Ⓘ : Junction Block (The number in the circle is the J/B No. and the connector code is shown beside it). Junction Blocks are shaded to clearly separate them from other parts (different junction blocks are shaded differently for further clarification).

Example:

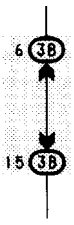

3B indicates that it is inside Junction Block No. 3.

Ⓙ : Indicates the wiring color.

Wire colors are indicated by an alphabetical code.

B = Black	L = Blue	R = Red
BR = Brown	LG = Light Green	V = Violet
G = Green	O = Orange	W = White
GR = Gray	P = Pink	Y = Yellow

The first letter indicates the basic wire color and the second letter indicates the color of the stripe.

Example: L – Y

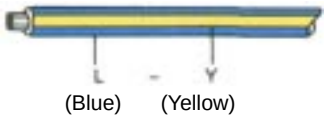

(Blue) (Yellow)

Ⓚ : Indicates a wiring Splice Point (Codes are "E" for the Engine Room, "I" for the Instrument Panel, and "B" for the Body).

Example:

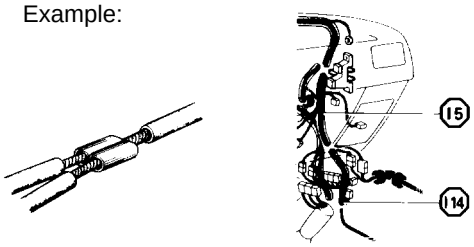

The Location of Splice Point I 5 is indicated by the shaded section.

Ⓛ : Page No.

Ⓜ : Indicates a shielded cable.

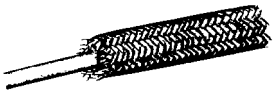

Ⓝ : Indicates a ground point.

The first letter of the code for each ground point(s) indicates the component's location, e.g., "E" for the Engine Compartment, "I" for the Instrument Panel and Surrounding area, and "B" for the Body and Surrounding area.

Ⓞ : Indicates the pin number of the connector.

The numbering system is different for female and male connectors.

Example:

Numbered in order from upper left to lower right

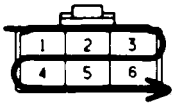

Female

Numbered in order from upper right to lower left

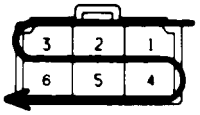

Male

Ⓟ : When 2 parts both use one connector in common, the parts connector name used in the wire routing section is shown in square brackets [ ].

Q

SYSTEM OUTLINE

WITH THE IGNITION SW TURNED ON, THE CURRENT FLOWS TO TERMINAL 3 OF THE POWER WINDOW MASTER SW, TERMINAL 2 OF THE POWER WINDOW CONTROL RELAY AND TERMINAL 8 OF THE POWER WINDOW SW THROUGH THE DOOR FUSE.

1. DRIVER'S WINDOW "MANUAL UP" OPERATION BY MASTER SW

HOLDING MANUAL SW (DRIVER'S) ON "UP" POSITION LOCATED IN POWER WINDOW MASTER SW, THE CURRENT FLOWS TO TERMINAL 5 OF THE POWER WINDOW CONTROL RELAY THROUGH TERMINAL 3 OF THE MASTER SW → TERMINAL 2 TO OPERATE A POWER WINDOW CONTROL RELAY. THUS THE CURRENT INSIDE THE RELAY FLOWS FROM TERMINAL 2 OF THE RELAY → TERMINAL 1 → TERMINAL 2 OF THE POWER WINDOW MOTOR → TERMINAL 1 → TERMINAL 4 OF THE RELAY → TERMINAL 3 → TO GROUND. THE MOTOR TURNS TO ASCENT THE WINDOW. RELEASING THIS SW, THE ROTATION OF MOTOR IS STOPPED AND THE WINDOWS CAN STOP AT WILL POINT.

(FOR THE "MANUAL DOWN" OPERATION, CURRENT FLOWS IN THE REVERSE DIRECTION BECAUSE THE TERMINALS WHERE IT FLOWS ARE CHANGED).

2. DRIVER'S WINDOW "AUTO DOWN" OPERATION BY MASTER SW

ONCE THE "AUTO DOWN" BUTTON OF THE MASTER SW IS PUSHED, THE CURRENT FLOWS TERMINAL 9 OF THE POWER WINDOW CONTROL RELAY THROUGH TERMINAL 3 OF THE MASTER SW → TERMINALS 8 AND 9 TO OPERATE THE RELAY. THUS THE CURRENT INSIDE THE POWER WINDOW CONTROL RELAY FLOWS FROM TERMINAL 2 OF THE RELAY → TERMINAL 4 → TERMINAL 1 OF THE POWER WINDOW MOTOR → TERMINAL 2 → TERMINAL 1 OF THE RELAY → TERMINAL 3 → TO GROUND. THE MOTOR CONTINUES THE ROTATION ENABLING TO DESCENT THE WINDOW.

THE WINDOW DESCENDS TO THE END POSITION. THE CURRENT WILL BE CUT OFF TO RELEASE THE AUTO DOWN FUNCTION BASED ON THE INCREASING CURRENT BETWEEN TERMINAL 2 OF THE RELAY AND TERMINAL 1 IN RELAY.

3. DRIVER'S WINDOW AUTO DOWN RELEASE OPERATION BY MASTER SW

HOLDING THE MANUAL SW (DRIVER'S) ON "UP" POSITION IN OPERATING AUTO DOWN. THE CURRENT FROM TERMINAL 3 OF THE MASTER SW PASSING TERMINAL 2 FLOWS TERMINAL 5 OF THE RELAY AND RELEASES THE AUTO DOWN FUNCTION IN THE POWER WINDOW CONTROL RELAY. RELEASING THE HAND FROM SW, WINDOW STOPS AND CONTINUING ON TOUCHING SW, THE FUNCTION SWITCHES TO MANUAL UP OPERATION.

4. PASSENGER'S WINDOW UP OPERATION (MASTER SW) AND WINDOW LOCK SW OPERATION

HOLDING PASSENGER'S WINDOW SW (MASTER SW) ON "UP", THE CURRENT FLOWS FROM TERMINAL 3 OF THE MASTER SW PASSING TERMINAL 6 TO TERMINAL 3 OF THE POWER WINDOW SW (PASSENGER'S) → TERMINAL 4 → TERMINAL 2 OF THE MOTOR → TERMINAL 1 → TERMINAL 9 OF THE POWER WINDOW SW → TERMINAL 7 → TERMINAL 1 OF THE MASTER SW → TERMINAL 4 TO GROUND. THE MOTOR RUNS TO ASCENT THE WINDOW. RELEASING THIS SW, THE ROTATION OF MOTOR IS STOPPED AND WINDOW CAN STOP AT WILL PLACE.

SWITCHING THE WINDOW LOCK SW IN "LOCK" POSITION, THE CIRCUIT IS OPENED AND STOPPED THE MOTOR ROTATION.

(FOR THE DOWN OPERATION, CURRENT FLOWS IN THE REVERSE DIRECTION BECAUSE THE TERMINALS WHERE IT FLOWS ARE CHANGED).

R

SERVICE HINTS

P2 POWER WINDOW CONTROL RELAY

3–GROUND: ALWAYS CONTINUITY

2–GROUND: APPROX. **12** VOLTS WITH IGNITION SW AT **ON** POSITION

5–GROUND: APPROX. **12** VOLTS WITH IGNITION SW AT **ON** POSITION AND MASTER SW AT **UP** POSITION

8–GROUND: APPROX. **12** VOLTS WITH IGNITION SW AT **ON** POSITION AND MASTER SW AT **AUTO DOWN** POSITION

9–GROUND: APPROX. **12** VOLTS WITH IGNITION SW AT **ON** POSITION AND MASTER SW AT **DOWN** OR **AUTO DOWN** POSITION

P 4 POWER WINDOW MASTER SW

4–GROUND: ALWAYS CONTINUITY

3–GROUND: APPROX. **12** VOLTS WITH IGNITION SW AT **ON** POSITION

WINDOW LOCK SW

OPEN WITH WINDOW LOCK SW AT **LOCK** POSITION

S

: PARTS LOCATION

CODE	SEE PAGE	CODE	SEE PAGE	CODE	SEE PAGE
P2	21	**P4**	21	**P6**	21
P3	21	**P5**	21		

T

: RELAY BLOCKS

CODE	SEE PAGE	RELAY BLOCK (RELAY BLOCK LOCATION)
1	16	R/B NO. 1 (INSTRUMENT PANEL LEFT SIDE)

U

: JUNCTION BLOCK AND WIRE HARNESS CONNECTOR

CODE	SEE PAGE	JUNCTION BLOCK AND WIRE HARNESS (CONNECTOR LOCATION)
3B	14	J/B NO. 3 AND COWL WIRE (INSTRUMENT PANEL LEFT SIDE)

V

: CONNECTOR JOINING WIRE HARNESS AND WIRE HARNESS

CODE	SEE PAGE	JOINING WIRE HARNESS AND WIRE HARNESS (CONNECTOR LOCATION)
ID1	26	FRONT DOOR RH WIRE AND COWL WIRE (RIGHT KICK PANEL)
IH1	26	FRONT DOOR LH WIRE AND COWL WIRE (LEFT KICK PANEL)

W

: GROUND POINTS

CODE	SEE PAGE	GROUND POINT LOCATION
IC	24	COWL LEFT

X

: SPLICE POINTS

CODE	SEE PAGE	WIRE HARNESSES WITH SPLICE POINTS
I5	24	COWL WIRE

Ⓠ : Explains the system outline.

Ⓡ : Indicates values or explains the function for reference during troubleshooting.

Ⓢ : Indicates the reference page showing the position on the vehicle of the parts in the system circuit.

Example: Part “P4” (Power Window Master SW) is on page 21 of the manual.

* The letter in the code is from the first letter of the part, and the number indicates its order in parts starting with that letter.

Example: P 4

Part is 4th in order

Power Window Master SW

Ⓣ : Indicates the reference page showing the position on the vehicle of Relay Block Connectors in the system circuit.

Example: Connector “1” is described on page 16 of this manual and is installed on the left side of the instrument panel.

Ⓤ : Indicates the reference page showing the position on the vehicle of J/B and Wire Harness in the system circuit.

Example: Connector “3B”connects the Cowl Wire and J/B No. 3. It is described on page 14 of this manual, and is installed on the instrument panel left side.

Ⓥ : Indicates the reference page describing the wiring harness and wiring harness connector (the female wiring harness is shown first, followed by the male wiring harness).

Example: Connector “ID1”connects the front door RH wire (female) and cowl wire (male). It is described on page 26 of this manual, and is installed on the right side kick panel.

Ⓦ : Indicates the reference page showing the position of the ground points on the vehicle.

Example: Ground point “IC” is described on page 24 of this manual and is installed on the cowl left side.

Ⓧ : Indicates the reference page showing the position of the splice points on the vehicle.

Example: Splice point “I 5” is on the Cowl Wire Harness and is described on page 24 of this manual.

HINT:

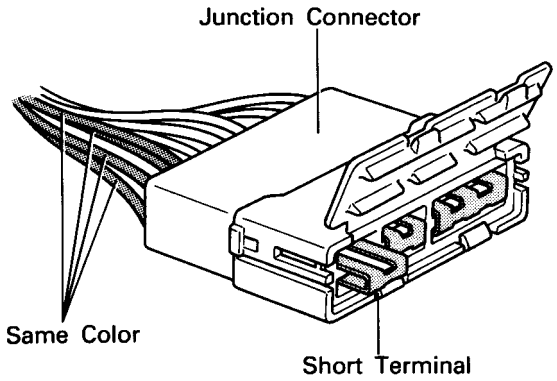

Junction connector (code: J1, J2, J3, J4, J5, J6, J7, J8, J9) in this manual include a short terminal which is connected to a number of wire harnesses. Always perform inspection with the short terminal installed. (When installing the wire harnesses, the harnesses can be connected to any position within the short terminal grouping. Accordingly, in other vehicles, the same position in the short terminal may be connected to a wire harness from a different part.)

Wire harness sharing the same short terminal grouping have the same color.

The “Current Flow Chart” section, describes which parts each power source (fuses, fusible links, and circuit breakers) transmits current to. In the Power Source circuit diagram, the conditions when battery power is supplied to each system are explained. Since all System Circuit diagrams start from the power source, the power source system must be fully understood.

POWER SOURCE (Current Flow Chart)

The chart below shows the route by which current flows from the battery to each electrical source (Fusible Link, Circuit Breaker, Fuse, etc.) and other parts.

The next page and following pages show the parts to which each electrical source outputs current.

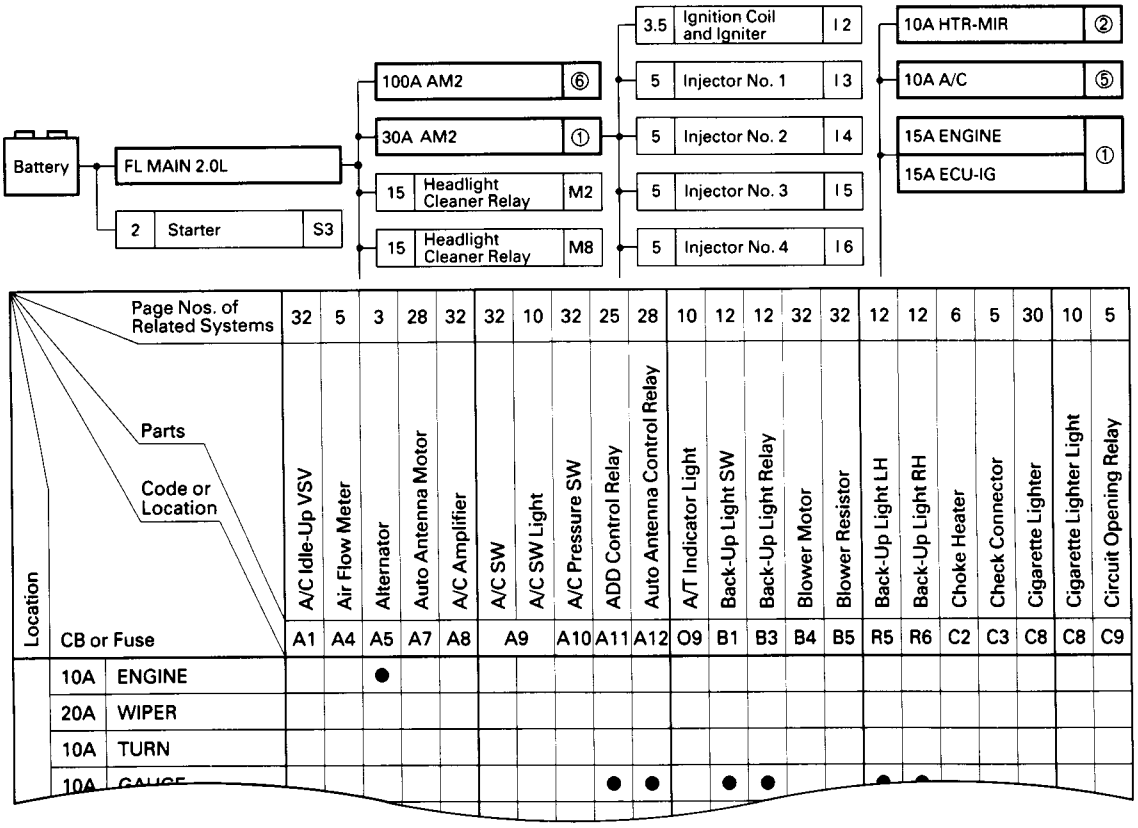

POWER SOURCE

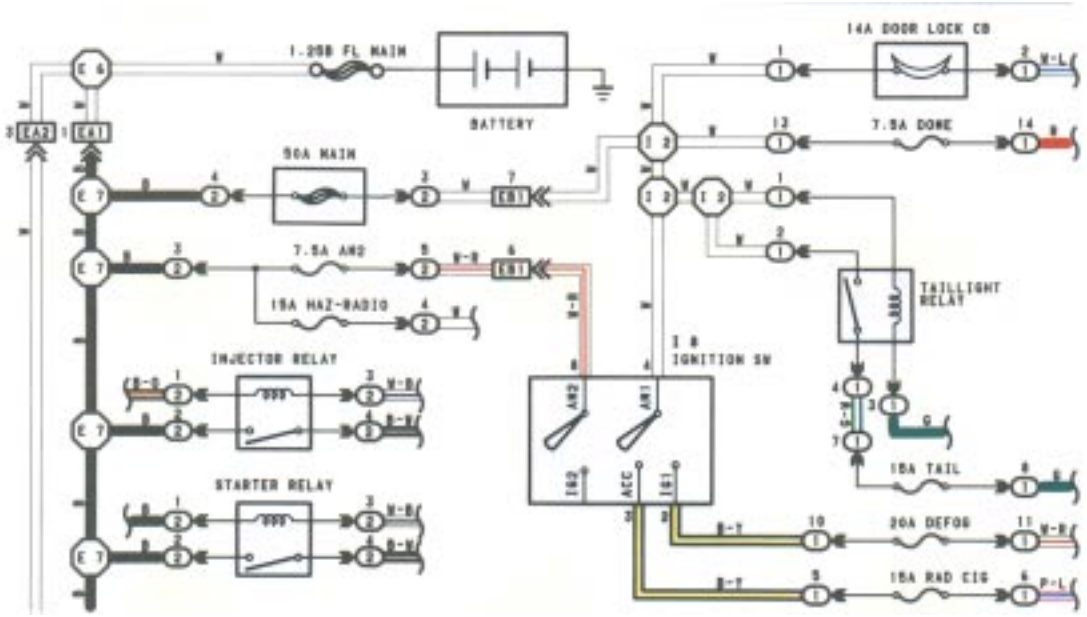

* The system shown here is an EXAMPLE ONLY. It is different to the actual circuit shown in the SYSTEM CIRCUITS SECTION.

The ground points circuit diagram shows the connections from all major parts to the respective ground points. When troubleshooting a faulty ground point, checking the system circuits which use a common ground may help you identify the problem ground quickly. The relationship between ground points (, , and shown below) can also be checked this way.

GROUND POINTS

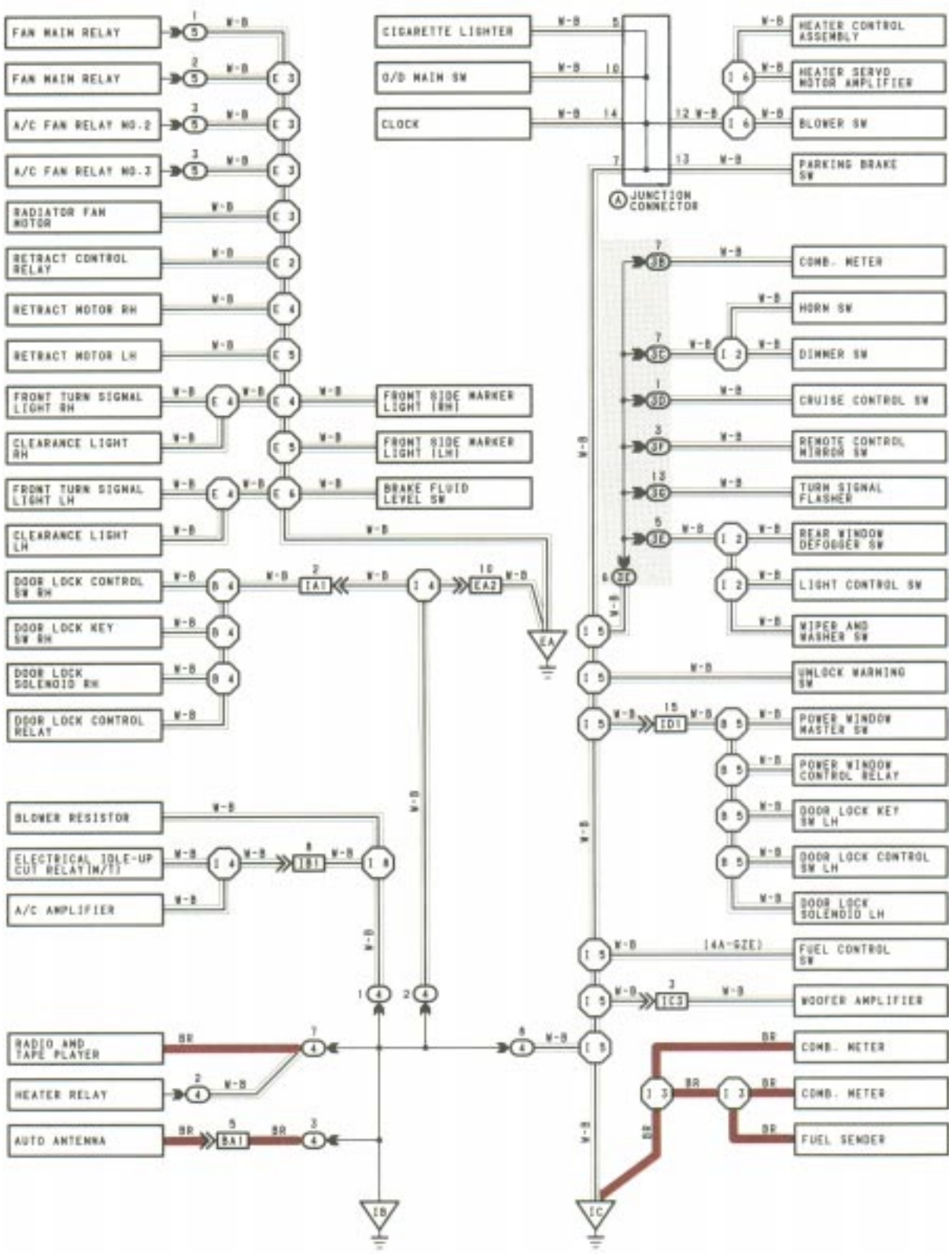

* The system shown here is an EXAMPLE ONLY. It is different to the actual circuit shown in the SYSTEM CIRCUITS SECTION.

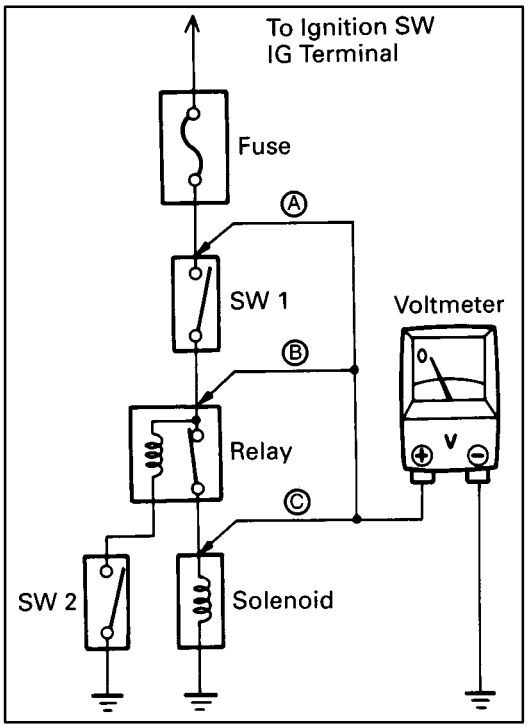

VOLTAGE CHECK

(a) Establish conditions in which voltage is present at the check point.

Example:

Ⓐ – Ignition SW on

Ⓑ – Ignition SW and SW 1 on

Ⓒ – Ignition SW, SW 1 and Relay on (SW 2 off)

(b) Using a voltmeter, connect the negative lead to a good ground point or negative battery terminal, and the positive lead to the connector or component terminal. This check can be done with a test light instead of a voltmeter.

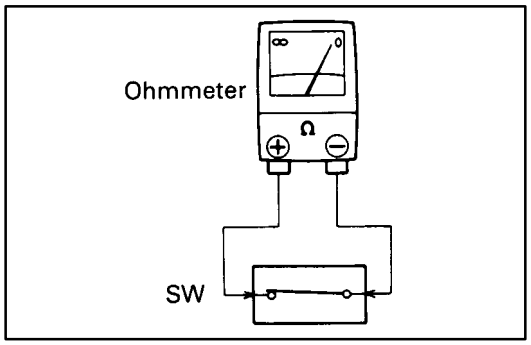

CONTINUITY AND RESISTANCE CHECK

(a) Disconnect the battery terminal or wire so there is no voltage between the check points.

(b) Contact the two leads of an ohmmeter to each of the check points.

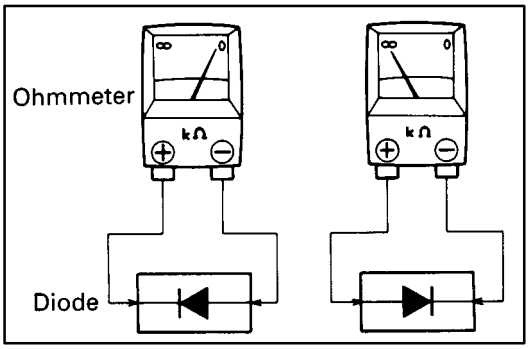

If the circuit has diodes, reverse the two leads and check again.

When contacting the negative lead to the diode positive side and the positive lead to the negative side, there should be continuity.

When contacting the two leads in reverse, there should be no continuity.

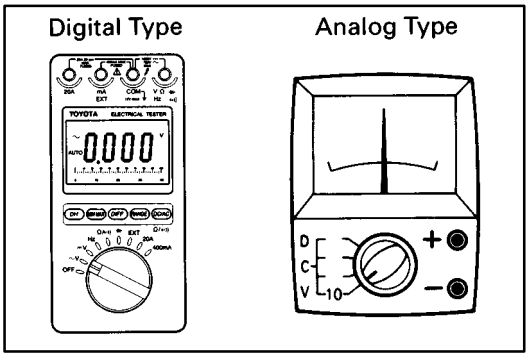

(c) Use a volt/ohmmeter with high impedance (10 kΩ/V minimum) for troubleshooting of the electrical circuit.

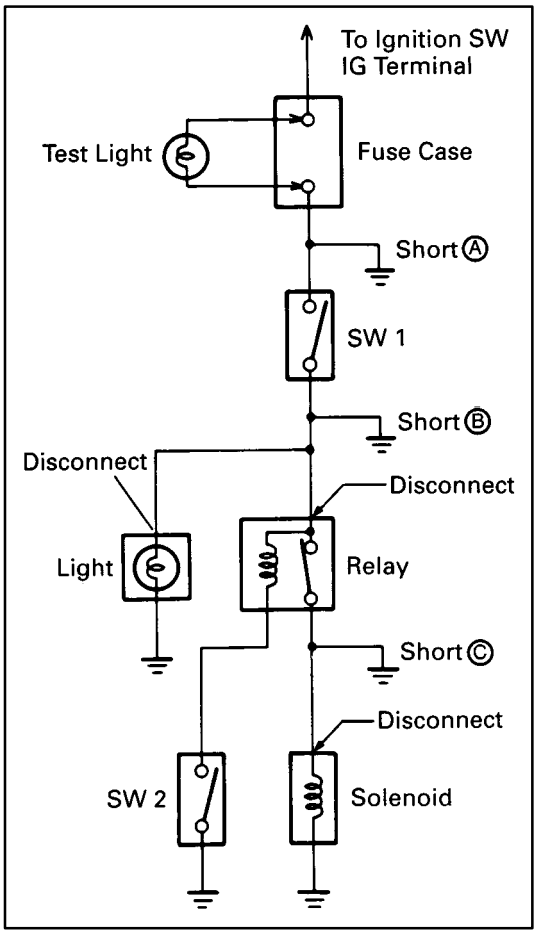

FINDING A SHORT CIRCUIT

(a) Remove the blown fuse and disconnect all loads of the fuse.

(b) Connect a test light in place of the fuse.

(c) Establish conditions in which the test light comes on.

Example:

Ⓐ – Ignition SW on

Ⓑ – Ignition SW and SW 1 on

Ⓒ – Ignition SW, SW 1 and Relay on (Connect the Relay) and SW 2 off (or Disconnect SW 2)

(d) Disconnect and reconnect the connectors while watching the test light.

The short lies between the connector where the test light stays lit and the connector where the light goes out.

(e) Find the exact location of the short by lightly shaking the problem wire along the body.

CAUTION:

(a) Do not open the cover or the case of the ECU unless absolutely necessary. (If the IC terminals are touched, the IC may be destroyed by static electricity.)

(b) When replacing the internal mechanism (ECU part) of the digital meter, be careful that no part of your body or clothing comes in contact with the terminals of leads from the IC, etc. of the replacement part (spare part).

DISCONNECTION OF MALE AND FEMALE CONNECTORS

To pull apart the connectors, pull on the connector itself, not the wire harness.

HINT: Check to see what kind of connector you are disconnecting before pulling apart.

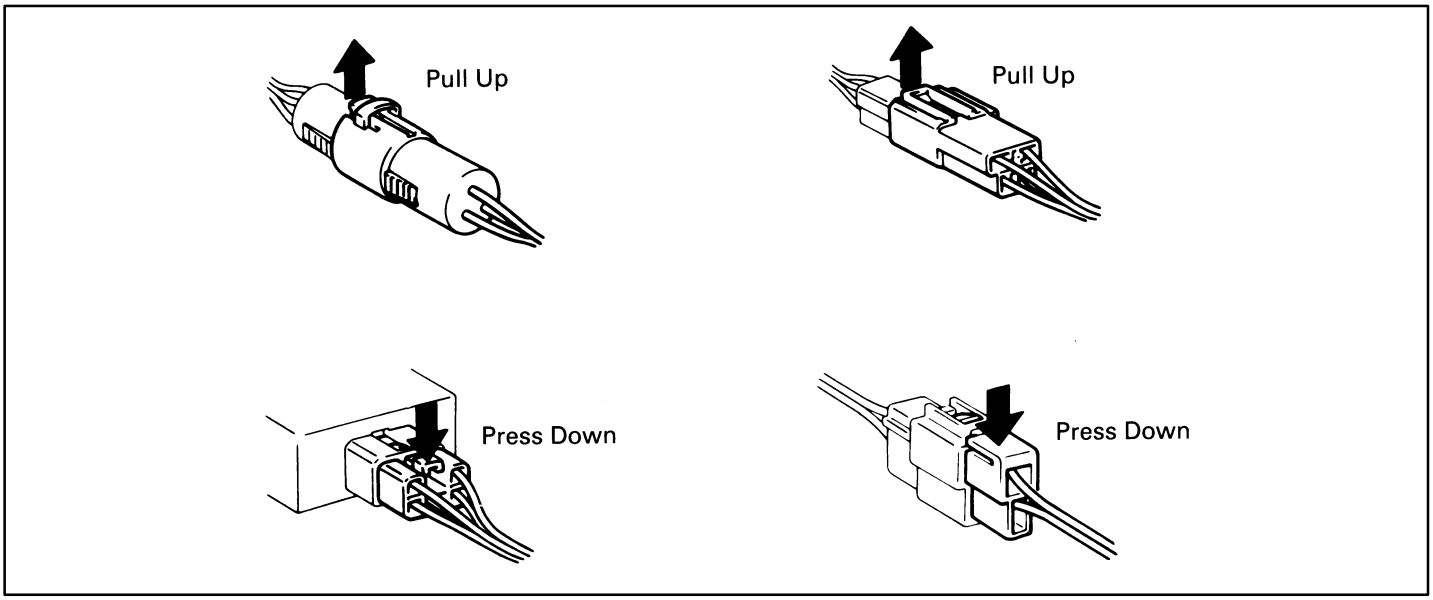

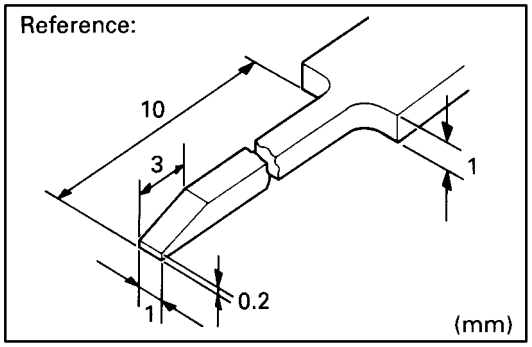

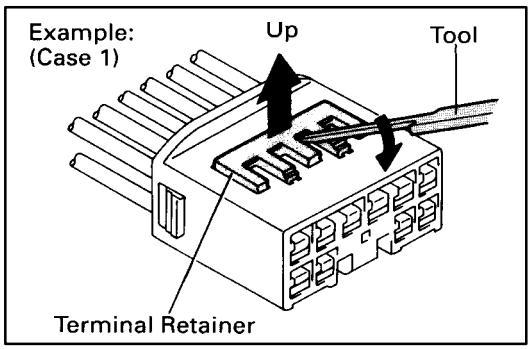

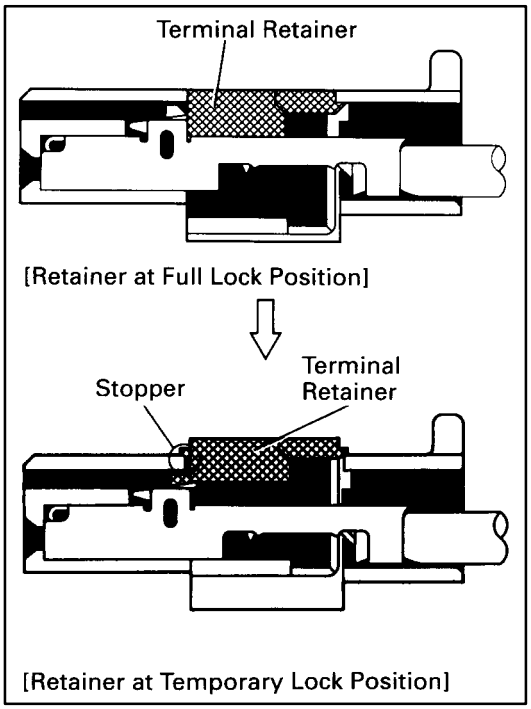

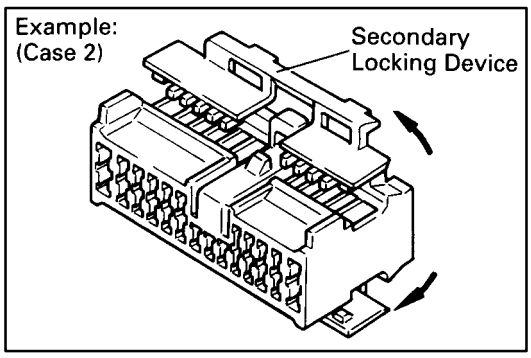

HOW TO REPLACE TERMINAL

(with terminal retainer or secondary locking device)

1. PREPARE THE SPECIAL TOOL

   HINT: To remove the terminal from the connector, please construct and use the special tool or like object shown on the left.

2. DISCONNECT CONNECTOR

3. DISENGAGE THE SECONDARY LOCKING DEVICE OR TERMINAL RETAINER.

   (a) Locking device must be disengaged before the terminal locking clip can be released and the terminal removed from the connector.

   (b) Use a special tool or the terminal pick to unlock the secondary locking device or terminal retainer.

NOTICE:

Do not remove the terminal retainer from connector body.

Ⓐ For Non–Waterproof Type Connector

HINT: The needle insertion position varies according to the connector's shape (number of terminals etc.), so check the position before inserting it.

"Case 1"

Raise the terminal retainer up to the temporary lock position.

"Case 2"

Open the secondary locking device.

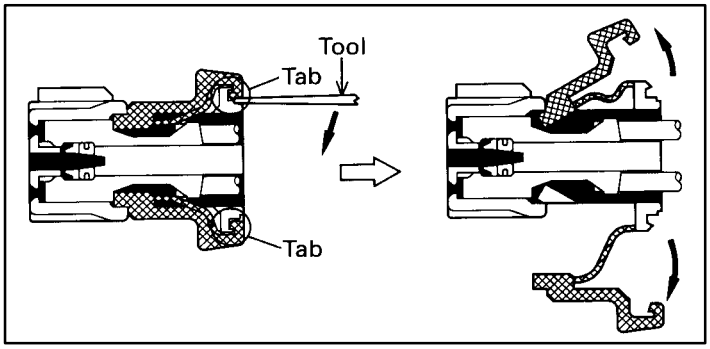

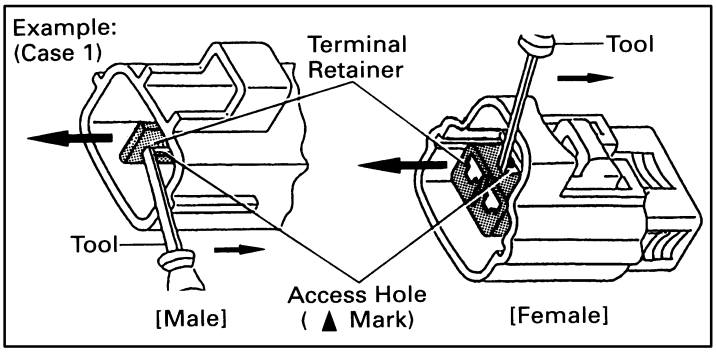

Ⓑ For Waterproof Type Connector

HINT: Terminal retainer color is different according to connector body.

Example:

Terminal Retainer	Connector Body
Black or White	: Gray
Black or White	: Dark Gray
Gray or White	: Black

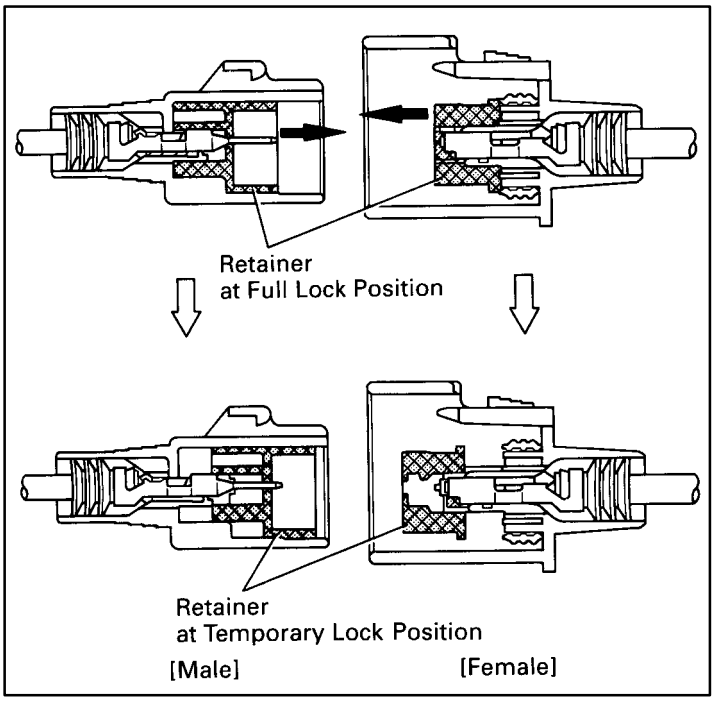

"Case 1"

Type where terminal retainer is pulled up to the temporary lock position (Pull Type).

Insert the special tool into the terminal retainer access hole (▲ Mark) and pull the terminal retainer up to the temporary lock position.

HINT: The needle insertion position varies according to the connector's shape (Number of terminals, etc.), so check the position before inserting it.

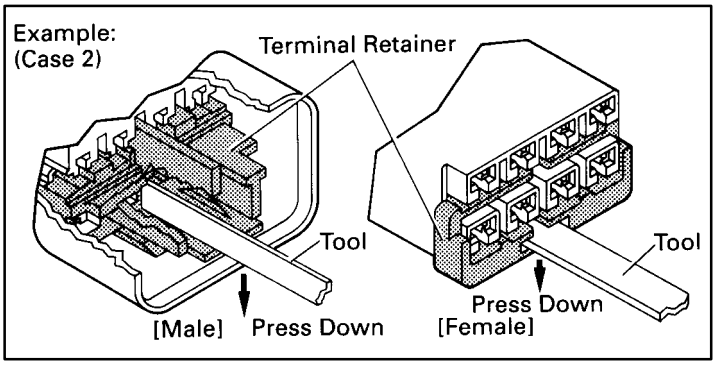

"Case 2"

Type which cannot be pulled as far as Power Lock insert the tool straight into the access hole of terminal retainer as shown.

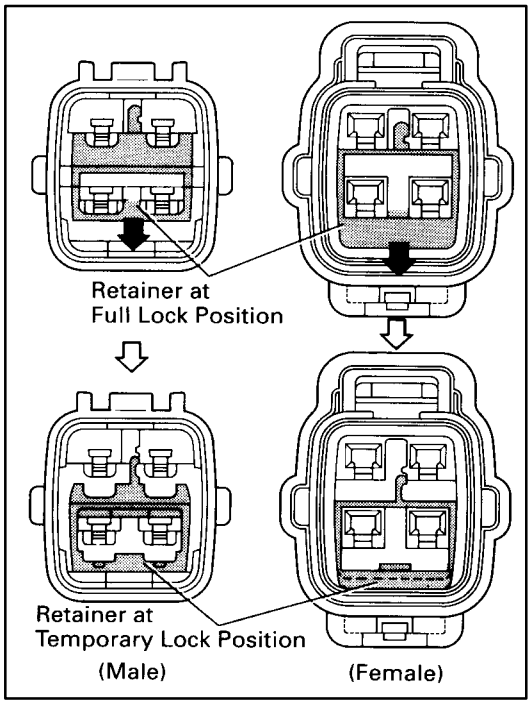

Push the terminal retainer down to the temporary lock position.

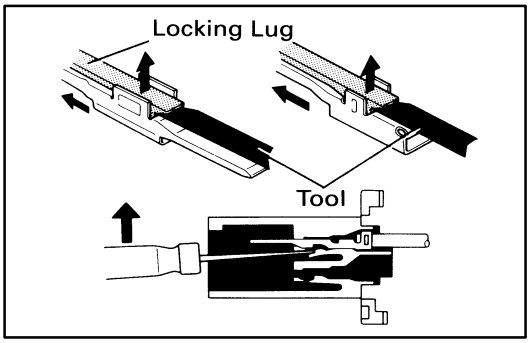

(c) Release the locking lug from terminal and pull the terminal out from rear.

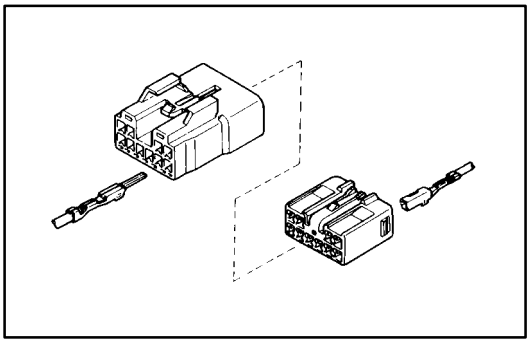

4. INSTALL TERMINAL TO CONNECTOR

(a) Insert the terminal.

HINT:

1. Make sure the terminal is positioned correctly.
2. Insert the terminal until the locking lug locks firmly.
3. Insert the terminal with terminal retainer in the temporary lock position.

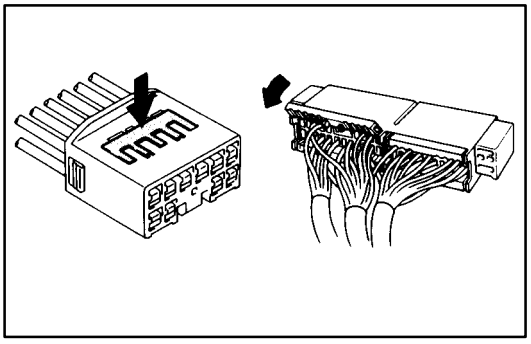

(b) Push the secondary locking device or terminal retainer in to the full lock position.

5. CONNECT CONNECTOR

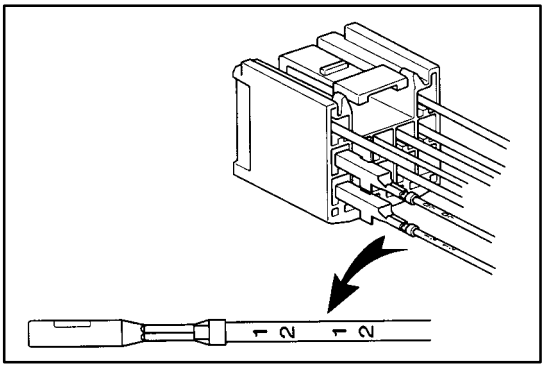

INSTALL TERMINAL TO CONNECTOR

Install the wire with the color shown in the manual into the indicated pin number of the connector.

When the wire color is GR or BR, and another wire color is also indicated in brackets, install the GR or BR wire in the pin location indicated by the pin number printed on the wire near the terminal.

ABBREVIATIONS

The following abbreviations are used in this manual.

ABS	=	Anti–Lock Brake System
A/C	=	Air Conditioning
A/T	=	Automatic Transaxle
COMB.	=	Combination
C/P	=	Coupe Type
ECU	=	Electronic Control Unit
EFI	=	Electronic Fuel Injection
EGR	=	Exhaust Gas Recirculation
FL	=	Fusible Link
IC	=	Integrated Circuit
IIA	=	Integrated Ignition Assembly
ISC	=	Idle Speed Control
J/B	=	Junction Block
L/B	=	Liftback Type
LH	=	Left-Hand
M/T	=	Manual Transaxle
O/D	=	Overdrive
R/B	=	Relay Block
RH	=	Right–Hand
SRS	=	Supplemental Restraint System
SW	=	Switch
TEMP.	=	Temperature
VSV	=	Vacuum Switching Valve
W/	=	With
W/O	=	Without

***** The titles given inside the components are the names of the terminals (terminal code) and are not treated as being abbreviations.

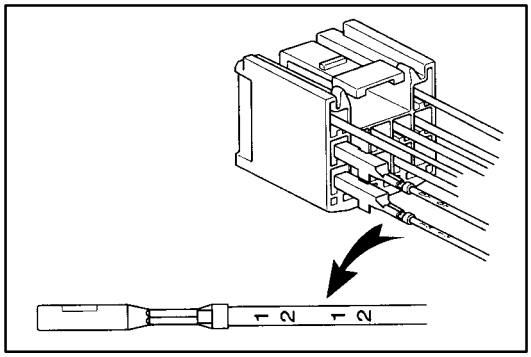

INSTALL TERMINAL TO CONNECTOR

Install the wire with the color shown in the manual into the indicated pin number of the connector.

When the wire color is GR or BR, and another wire color is also indicated in brackets, install the GR or BR wire in the pin location indicated by the pin number printed on the wire near the terminal.

ABBREVIATIONS

The following abbreviations are used in this manual.

ABS	=	Anti–Lock Brake System
A/C	=	Air Conditioning
A/T	=	Automatic Transaxle
COMB.	=	Combination
C/P	=	Coupe Type
ECU	=	Electronic Control Unit
EFI	=	Electronic Fuel Injection
EGR	=	Exhaust Gas Recirculation
FL	=	Fusible Link
IC	=	Integrated Circuit
IIA	=	Integrated Ignition Assembly
ISC	=	Idle Speed Control
J/B	=	Junction Block
L/B	=	Liftback Type
LH	=	Left-Hand
M/T	=	Manual Transaxle
O/D	=	Overdrive
R/B	=	Relay Block
RH	=	Right–Hand
SRS	=	Supplemental Restraint System
SW	=	Switch
TEMP.	=	Temperature
VSV	=	Vacuum Switching Valve
W/	=	With
W/O	=	Without

***** The titles given inside the components are the names of the terminals (terminal code) and are not treated as being abbreviations.

GLOSSARY OF TERMS AND SYMBOLS

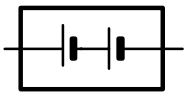

BATTERY

Stores chemical energy and converts it into electrical energy. Provides DC current for the auto's various electrical circuits.

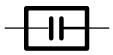

CAPACITOR (Condenser)

A small holding unit for temporary storage of electrical voltage.



CIGARETTE LIGHTER

An electric resistance heating element.



CIRCUIT BREAKER

Basically a reusable fuse, a circuit breaker will heat and open if too much current flows through it. Some units automatically reset when cool, others must be manually reset.



DIODE

A semiconductor which allows current flow in only one direction.



DIODE, ZENER

A diode which allows current flow in one direction but blocks reverse flow only up to a specific voltage. Above that potential, it passes the excess voltage. This acts as a simple voltage regulator.



DISTRIBUTOR, IIA

Channels high–voltage current from the ignition coil to the individual spark plugs.



FUSE

A thin metal strip which burns through when too much current flows through it, thereby stopping current flow and protecting a circuit from damage.

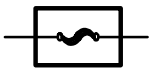

(for Medium Current Fuse)

FUSIBLE LINK

A heavy–gauge wire placed in high amperage circuits which burns through on overloads, thereby protecting the circuit. The numbers indicate the cross–section surface area of the wires.



(for High Current Fuse or Fusible Link.)



GROUND

The point at which wiring attaches to the Body, thereby providing a return path for an electrical circuit; without a ground, current cannot flow.

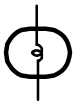

HEADLIGHTS

1. SINGLE FILAMENT

Current flow causes a headlight filament to heat up and emit light. A headlight may have either a single (1) filament or a double (2) filament.



2. DOUBLE FILAMENT



HORN

An electric device which sounds a loud audible signal.

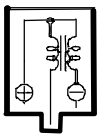

IGNITION COIL

Converts low–voltage DC current into high–voltage ignition current for firing the spark plugs.



LIGHT

Current flow through a filament causes the filament to heat up and emit light.



LED (LIGHT EMITTING DIODE)

Upon current flow, these diodes emit light without producing the heat of a comparable light.



METER, ANALOG

Current flow activates a magnetic coil which causes a needle to move, thereby providing a relative display against a background calibration.



METER, DIGITAL

Current flow activates one or many LED's, LCD's, or fluorescent displays, which provide a relative or digital display.



MOTOR

A power unit which converts electrical energy into mechanical energy, especially rotary motion.

RELAY

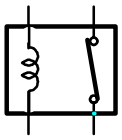

1. NORMALLY CLOSED

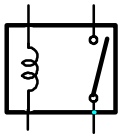

2. NORMALLY OPEN

Basically, an electrically operated switch which may be normally closed (1) or open (2).

Current flow through a small coil creates a magnetic field which either opens or closes an attached switch.

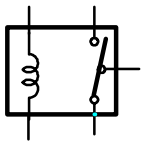

RELAY, DOUBLE THROW

A relay which passes current through one set of contacts or the other.



RESISTOR

An electrical component with a fixed resistance, placed in a circuit to reduce voltage to a specific value.



RESISTOR, TAPPED

A resistor which supplies two or more different non adjustable resistance values.

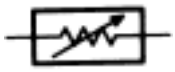

RESISTOR, VARIABLE or RHEOSTAT

A controllable resistor with a variable rate of resistance. Also called a potentiometer or rheostat.

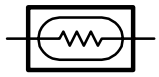

SENSOR (Thermistor)

A resistor which varies its resistance with temperature.



SENSOR, ANALOG SPEED

Uses magnetic impulses to open and close a switch to create a signal for activation of other components.



SHORT PIN

Used to provide an unbroken connection within a junction block.

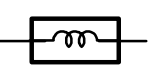

SOLENOID

An electromagnetic coil which forms a magnetic field when current flows, to move a plunger, etc.



SPEAKER

An electromechanical device which creates sound waves from current flow.

SWITCH, MANUAL

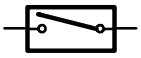

1. NORMALLY OPEN

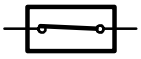

2. NORMALLY CLOSED

Opens and closes circuits, thereby stopping (1) or allowing (2) current flow.

SWITCH, DOUBLE THROW

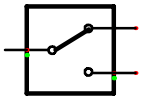

A switch which continuously passes current through one set of contacts or the other.

SWITCH, IGNITION

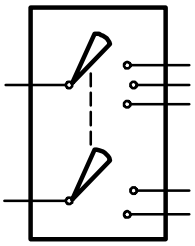

A key operated switch with several positions which allows various circuits, particularly the primary ignition circuit, to become operational.

SWITCH, WIPER PARK

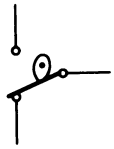

Automatically returns wipers to the stop position when the wiper switch is turned off.

TRANSISTOR

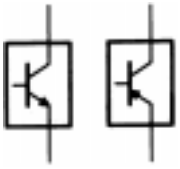

A solidstate device typically used as an electronic relay; stops or passes current depending on the voltage applied at “base.”

WIRES



(1) NOT CONNECTED

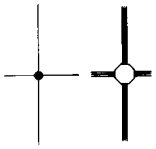

(2) SPLICED

Wires are always drawn as straight lines on wiring diagrams. Crossed wires (1) without a black dot at the junction are not joined; crossed wires (2) with a black dot or octagonal (◯) mark at the junction are spliced (joined) connections.

RELAY LOCATIONS

[Engine Compartment]

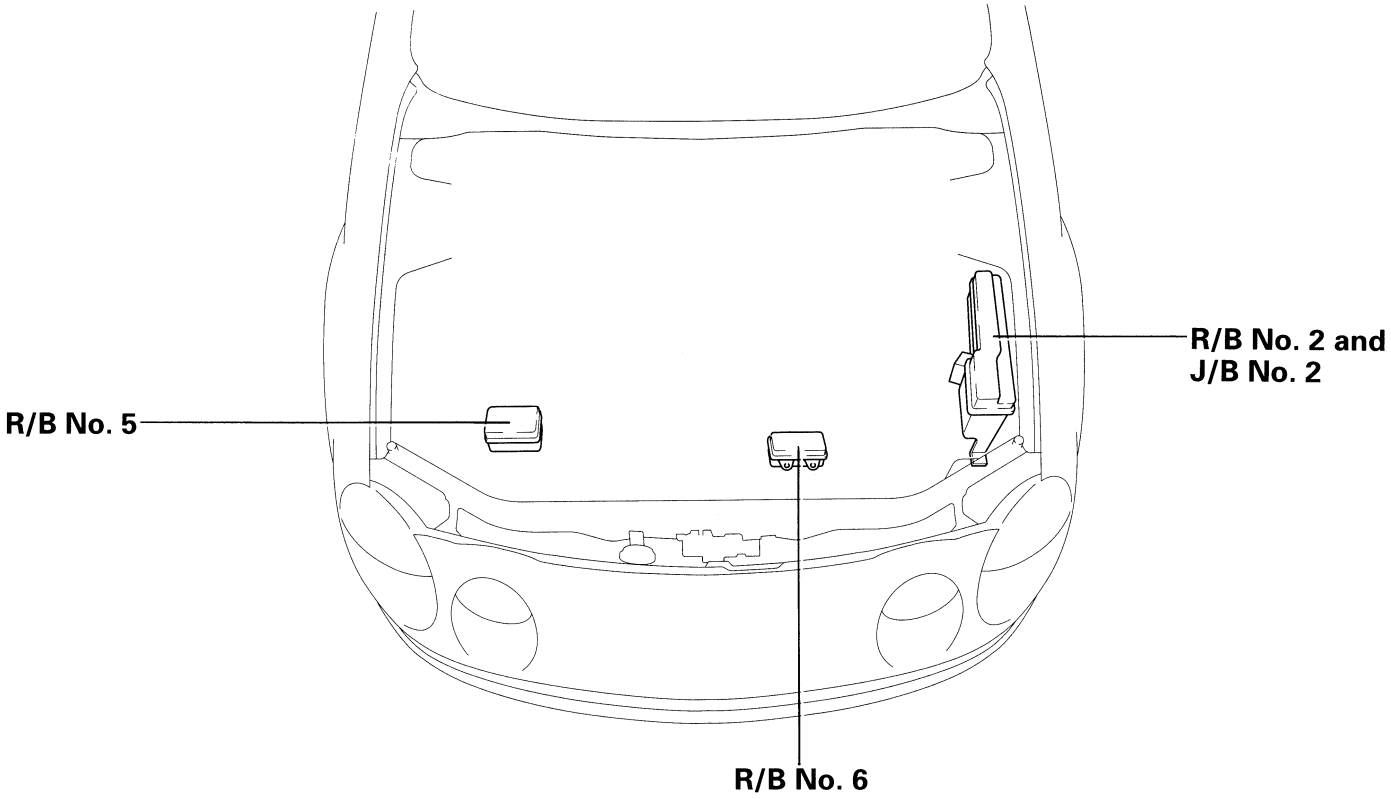

[Instrument Panel]

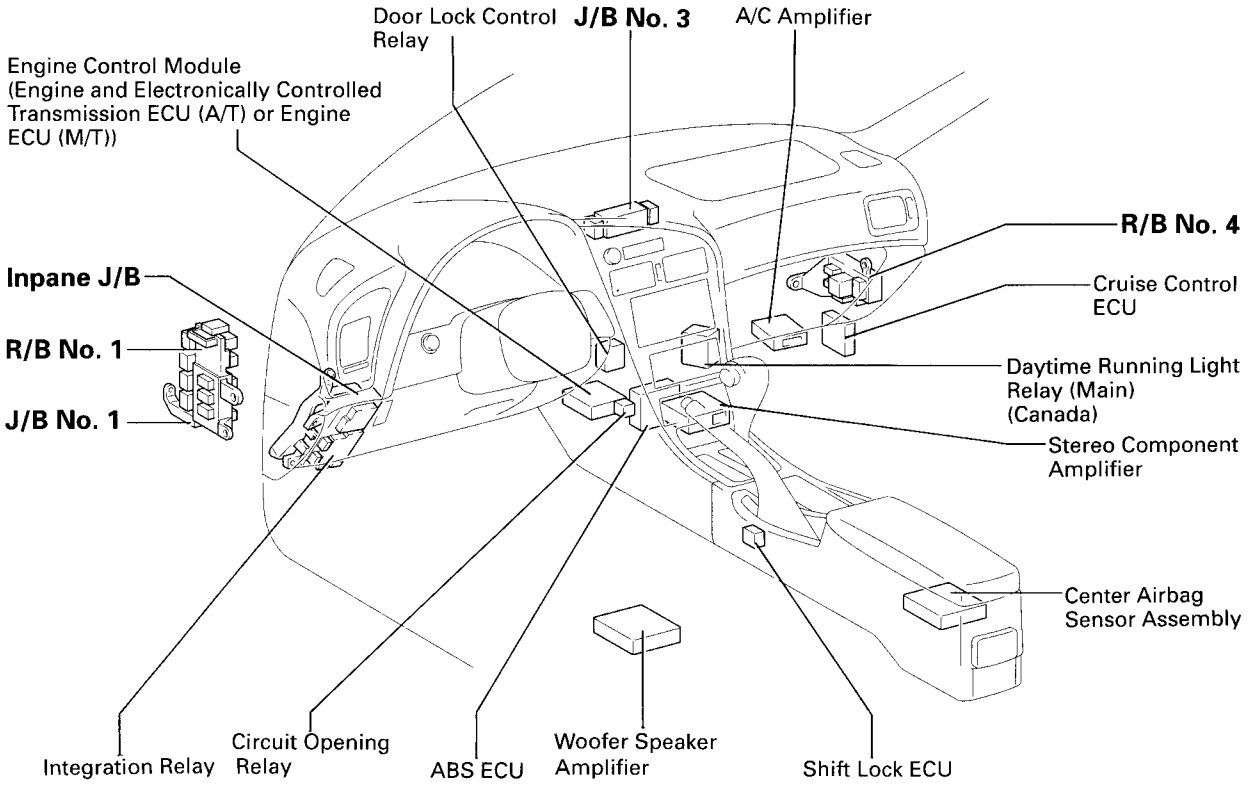

[Body]

[L/B]

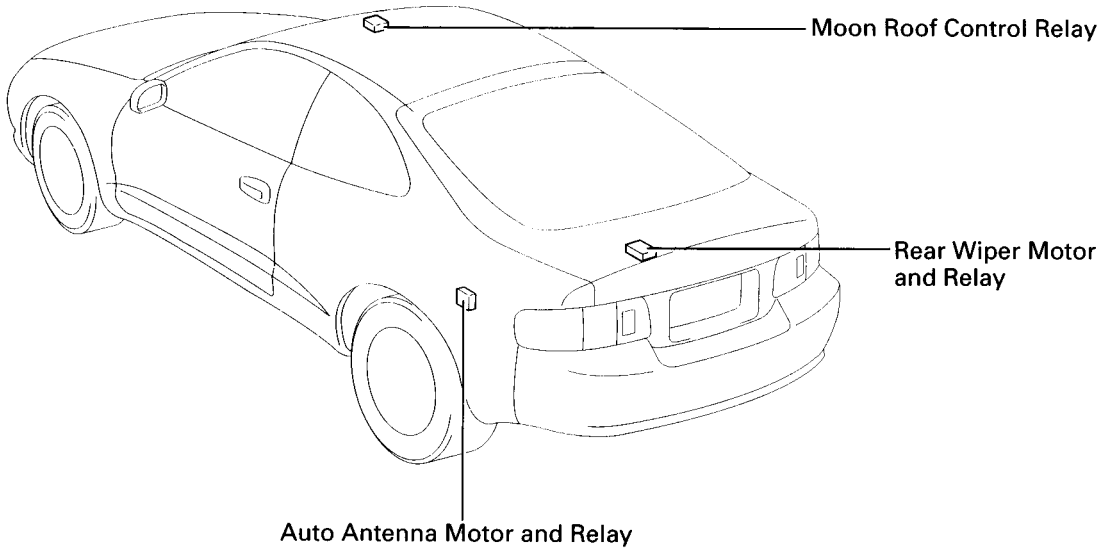

[BODY] [C/P]

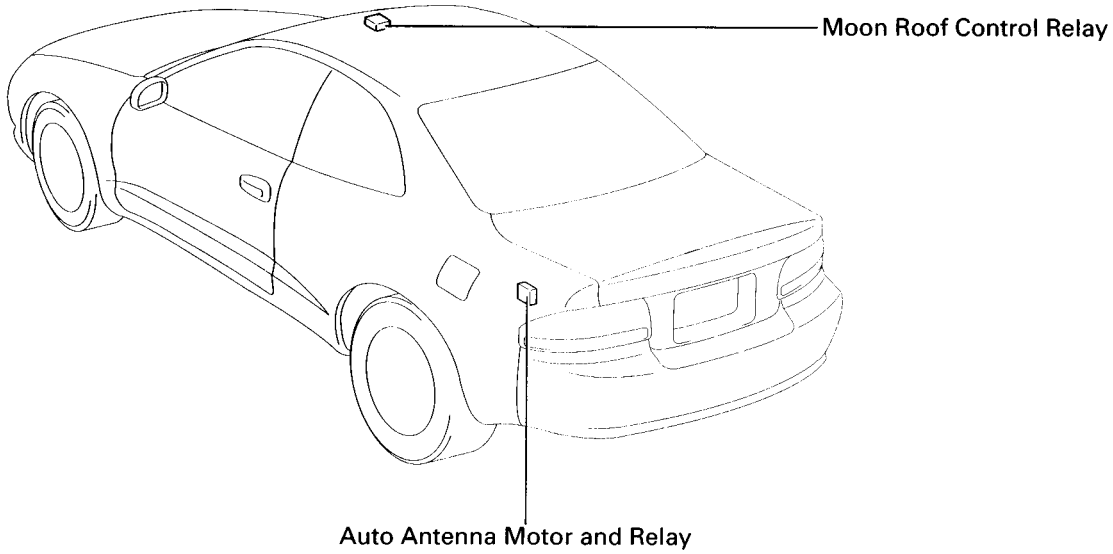

[Body] [Convertible]

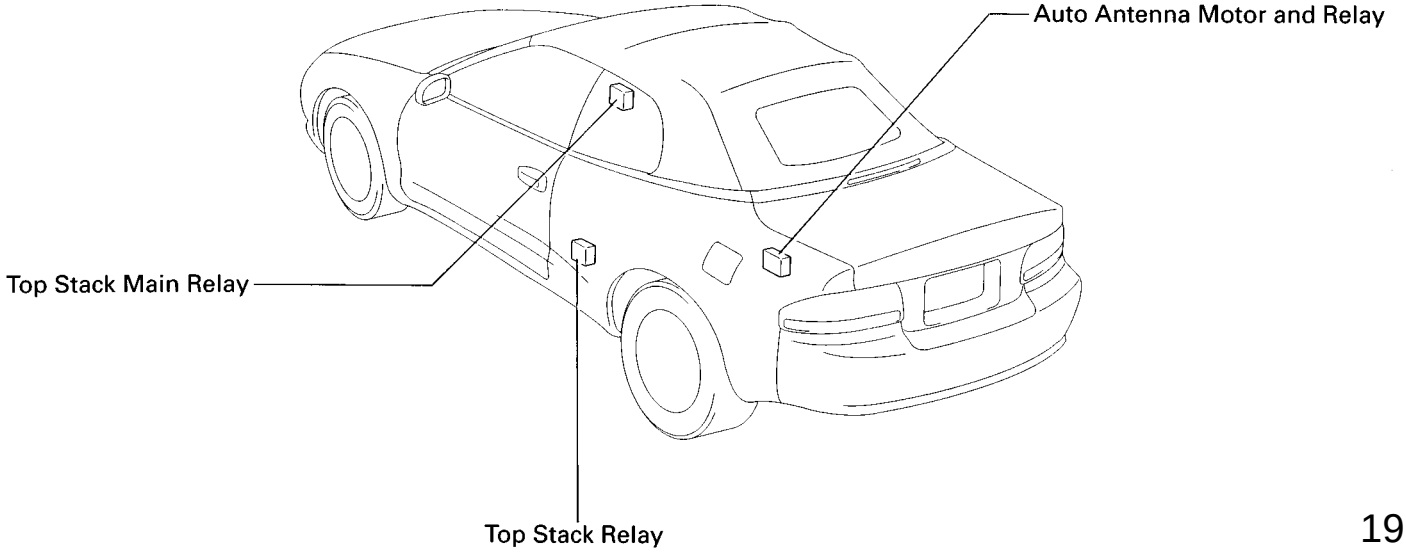

RELAY LOCATIONS

: Inpane J/B	Left Kick Panel	(See Page 18)

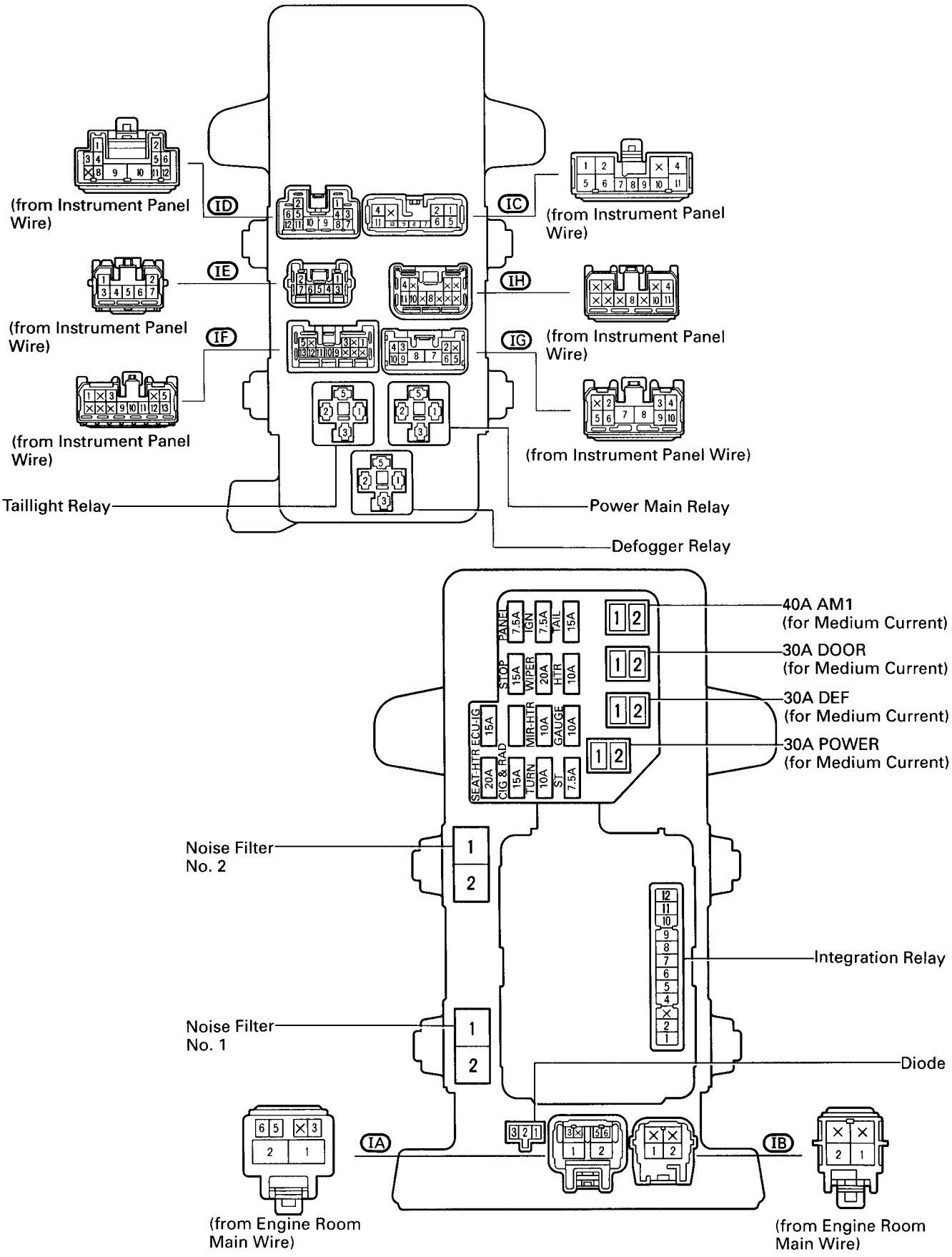

[Inpane J/B Inner Circuit]

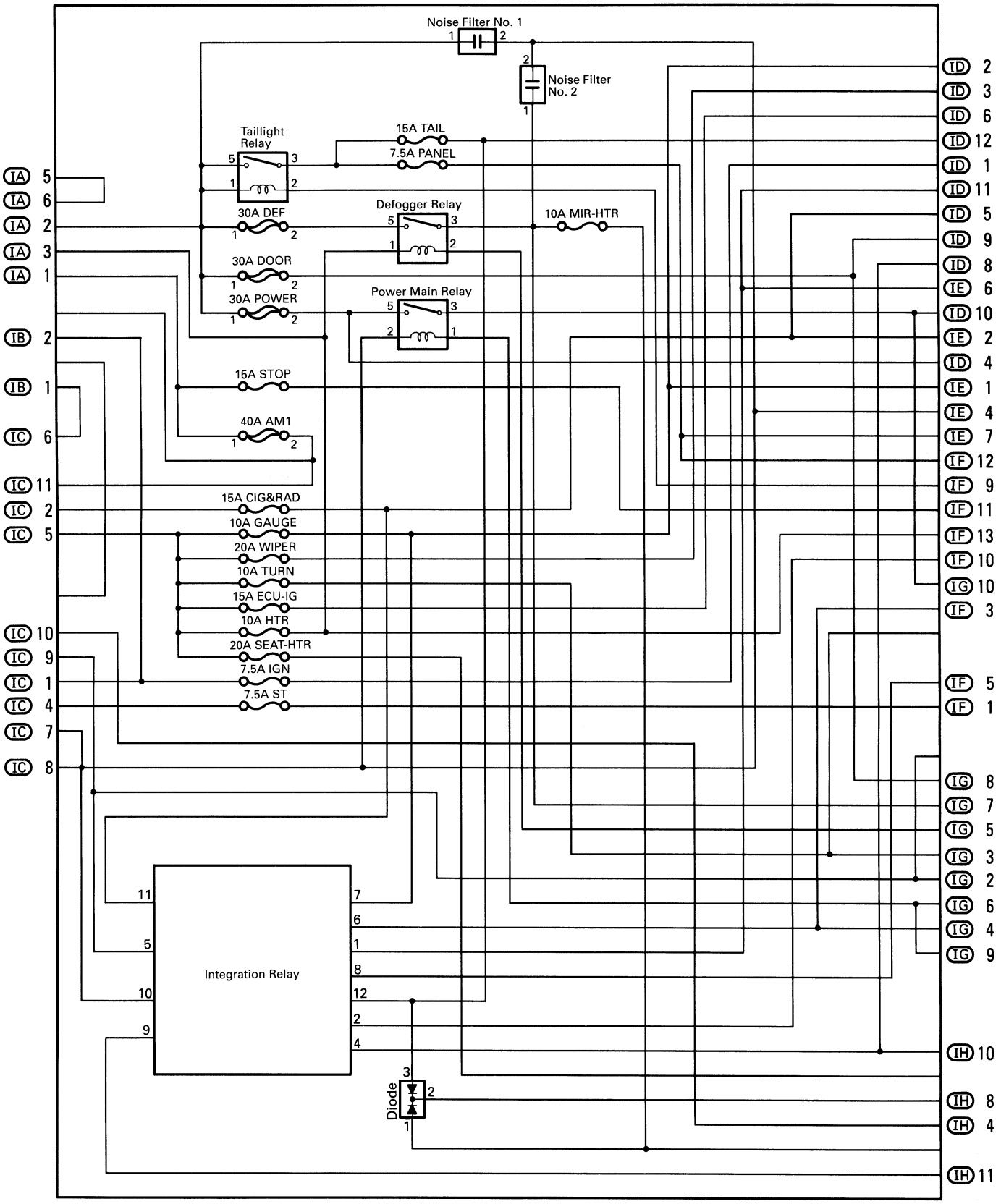

RELAY LOCATIONS

: J/B No. 1	Left Kick Panel	(See Page 18)

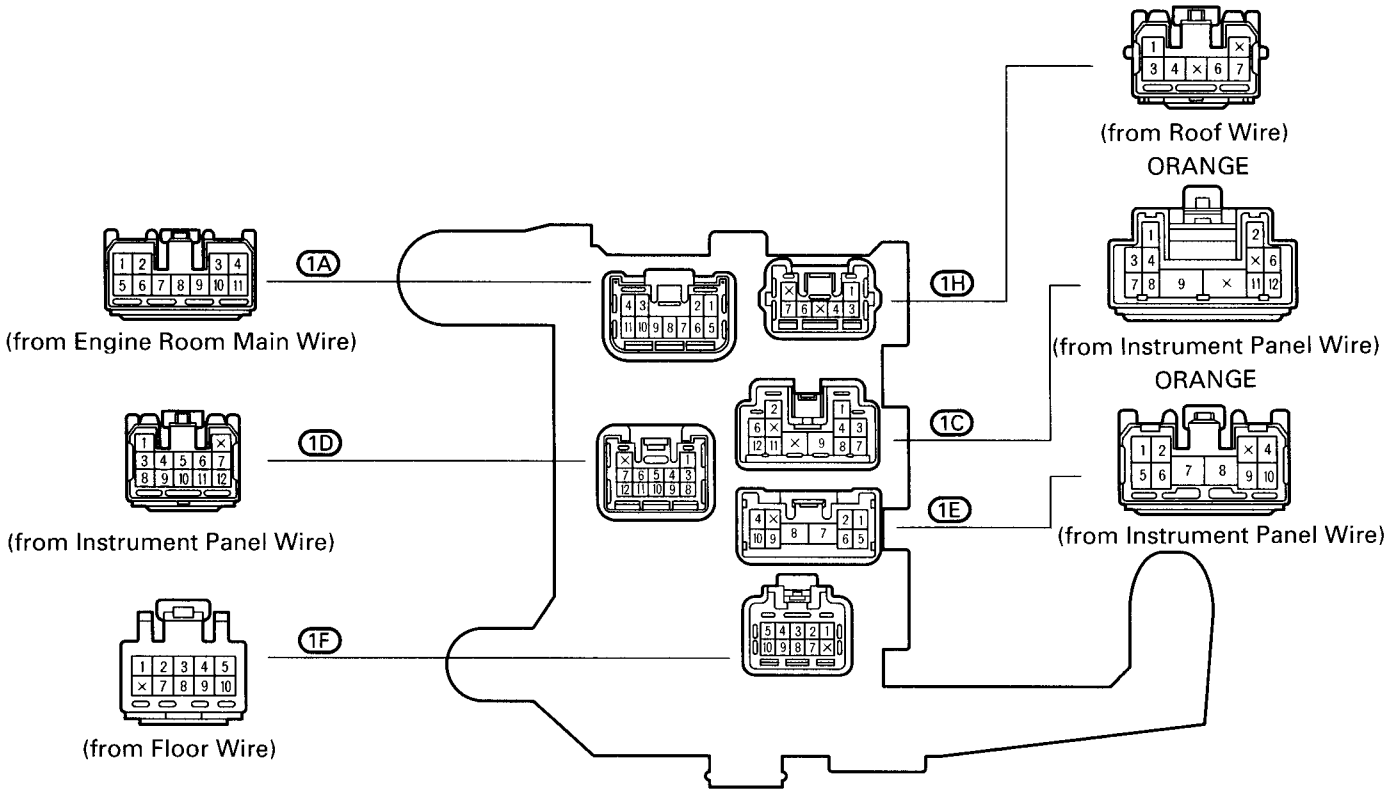

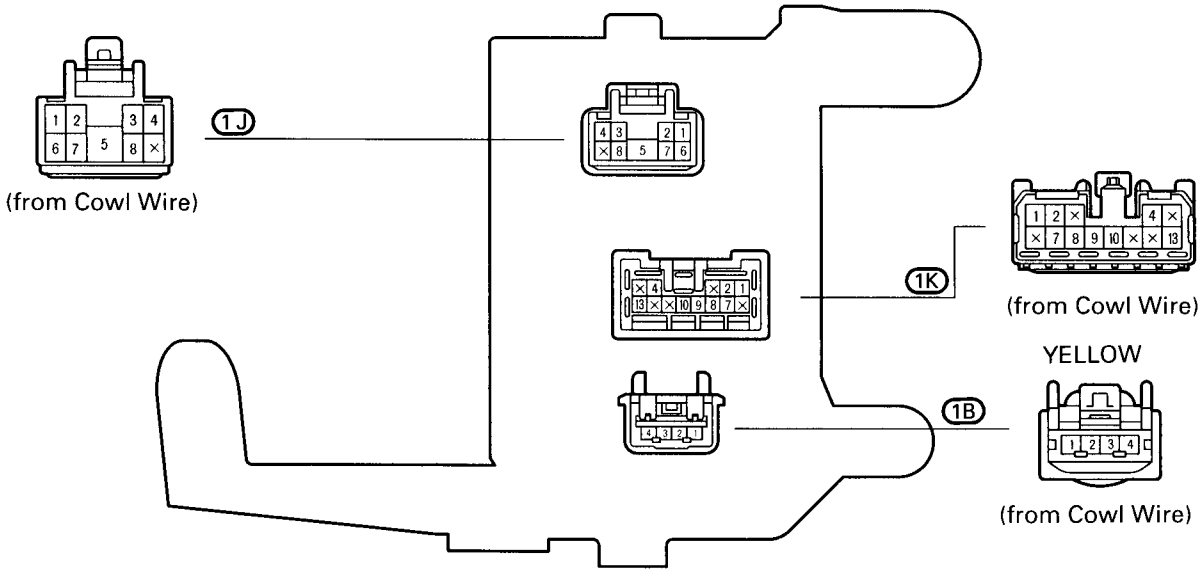

[J/B No. 1 Inner Circuit]

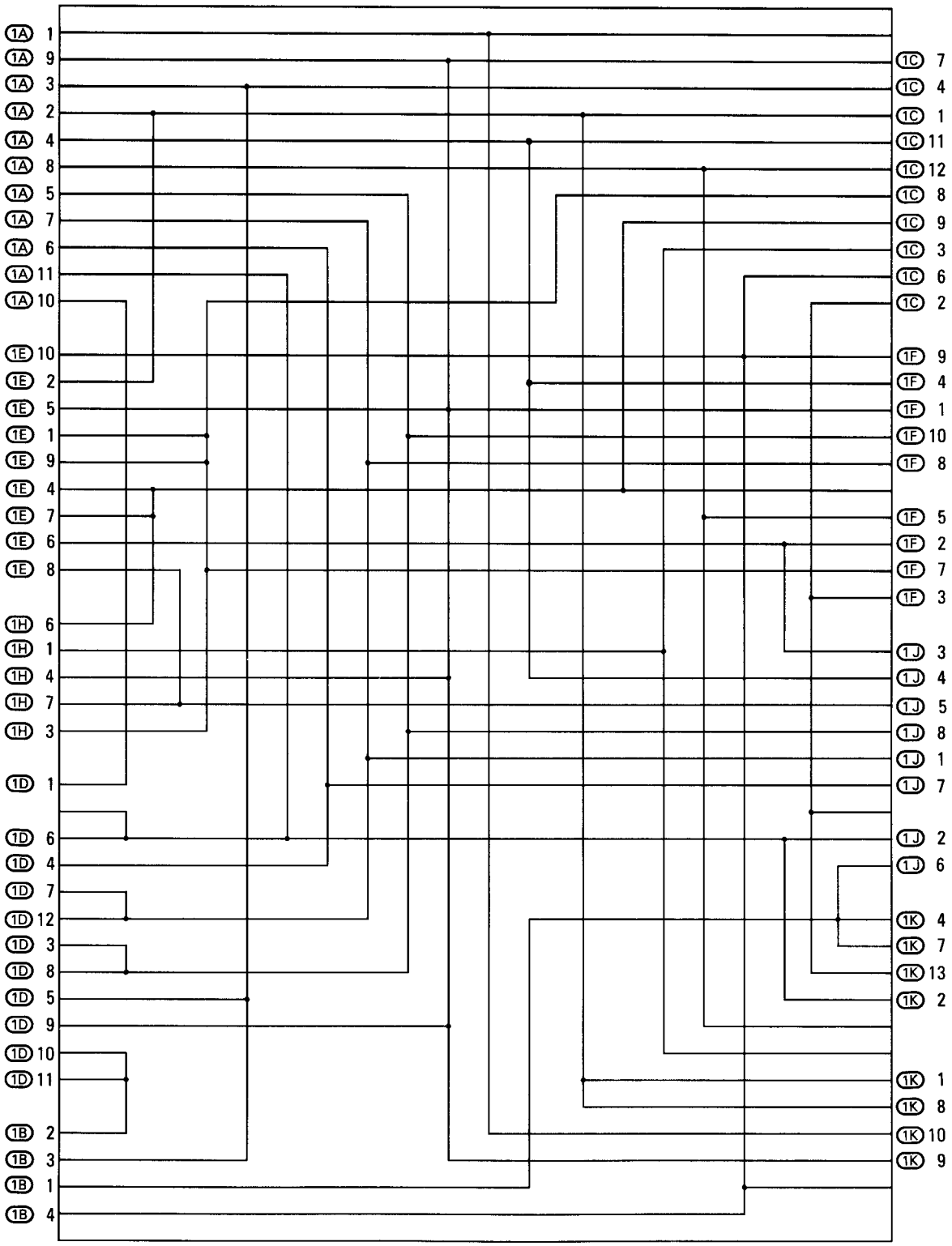

RELAY LOCATIONS

⬭ : J/B No. 3	Behind the Instrument Panel Center	(See Page 18)

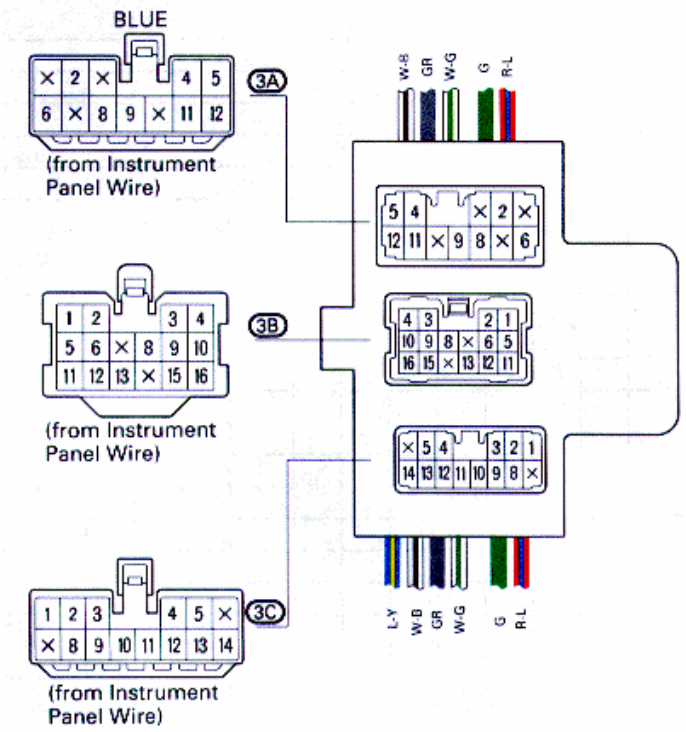

[J/B No. 3 Inner Circuit]

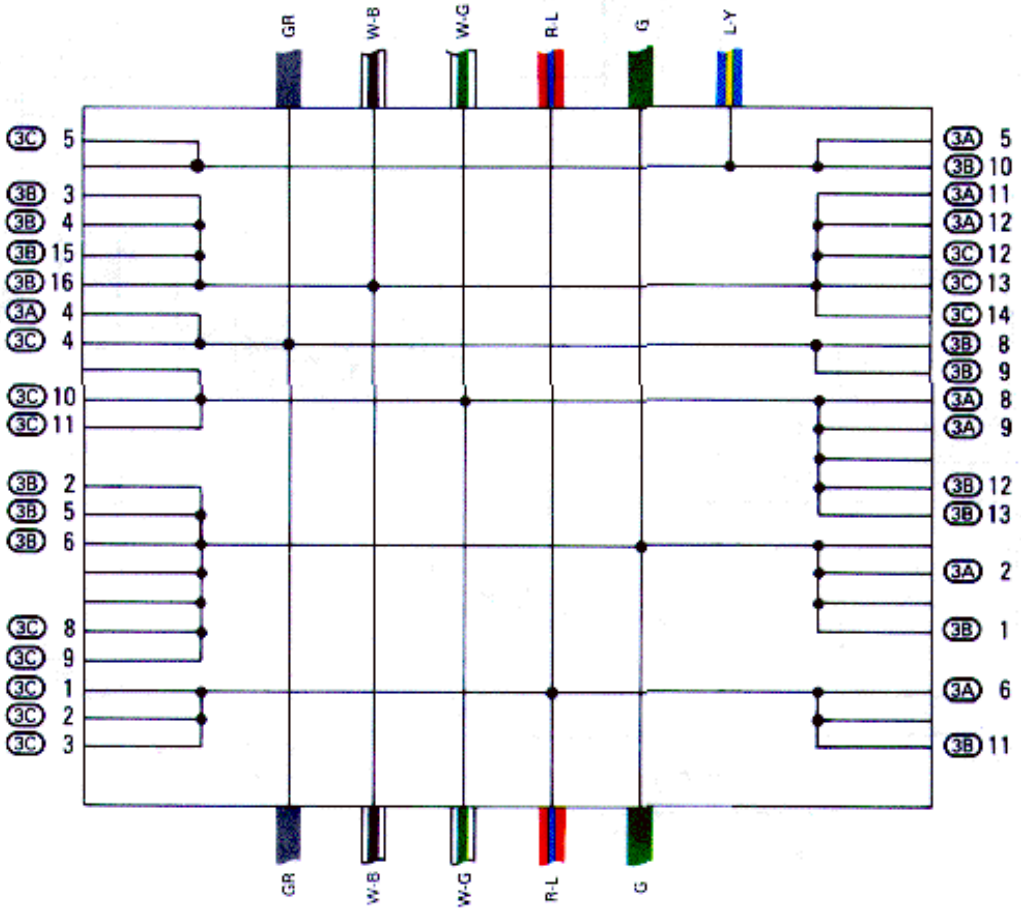

① : R/B No. 1	**Left Kick Panel** (See Page 18)

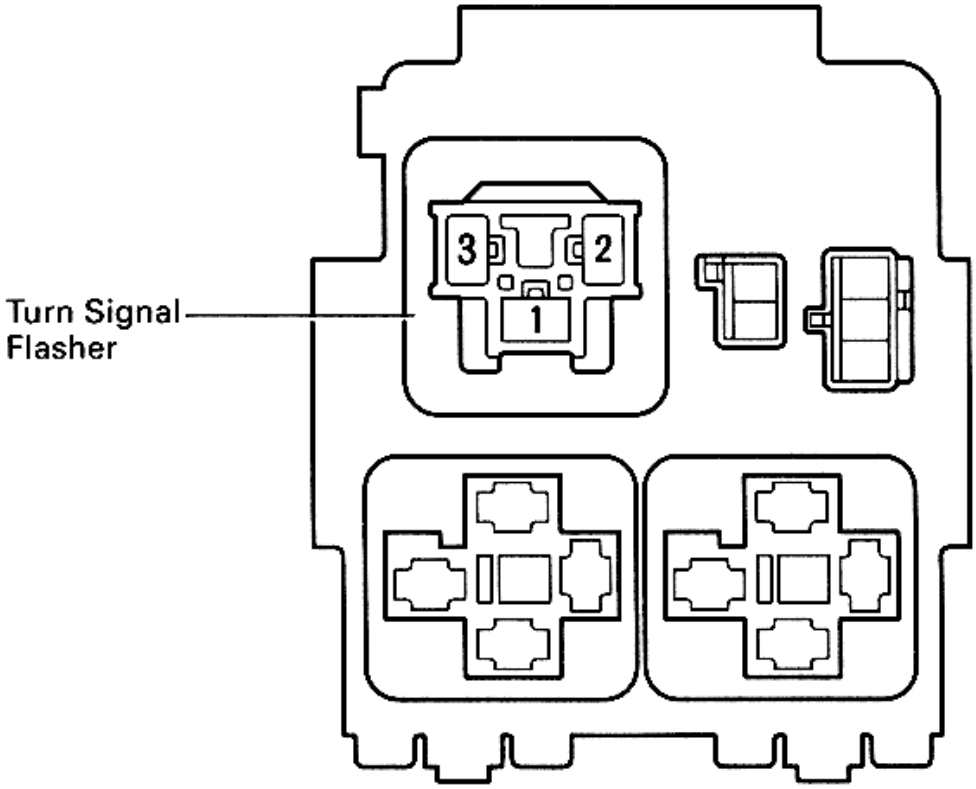

④ : R/B No. 4	**Right Kick Panel** (See Page 18)

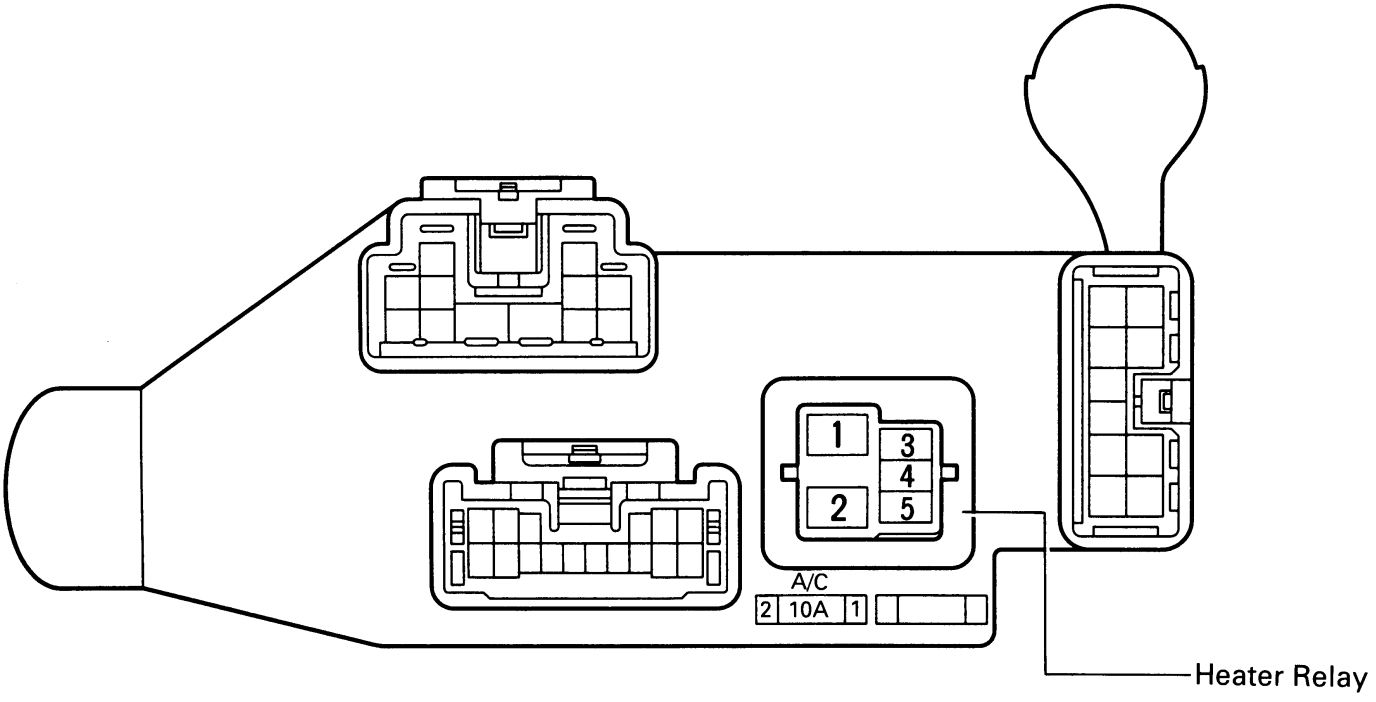

RELAY LOCATIONS

② : R/B No. 2 ⬭ : J/B No. 2	**Engine Compartment Left** (See Page 18)

*1: 100A ALT
(for High Current)
*2: 60A MAIN
(for High Current)
*3: 50A ABS
(for High Current)

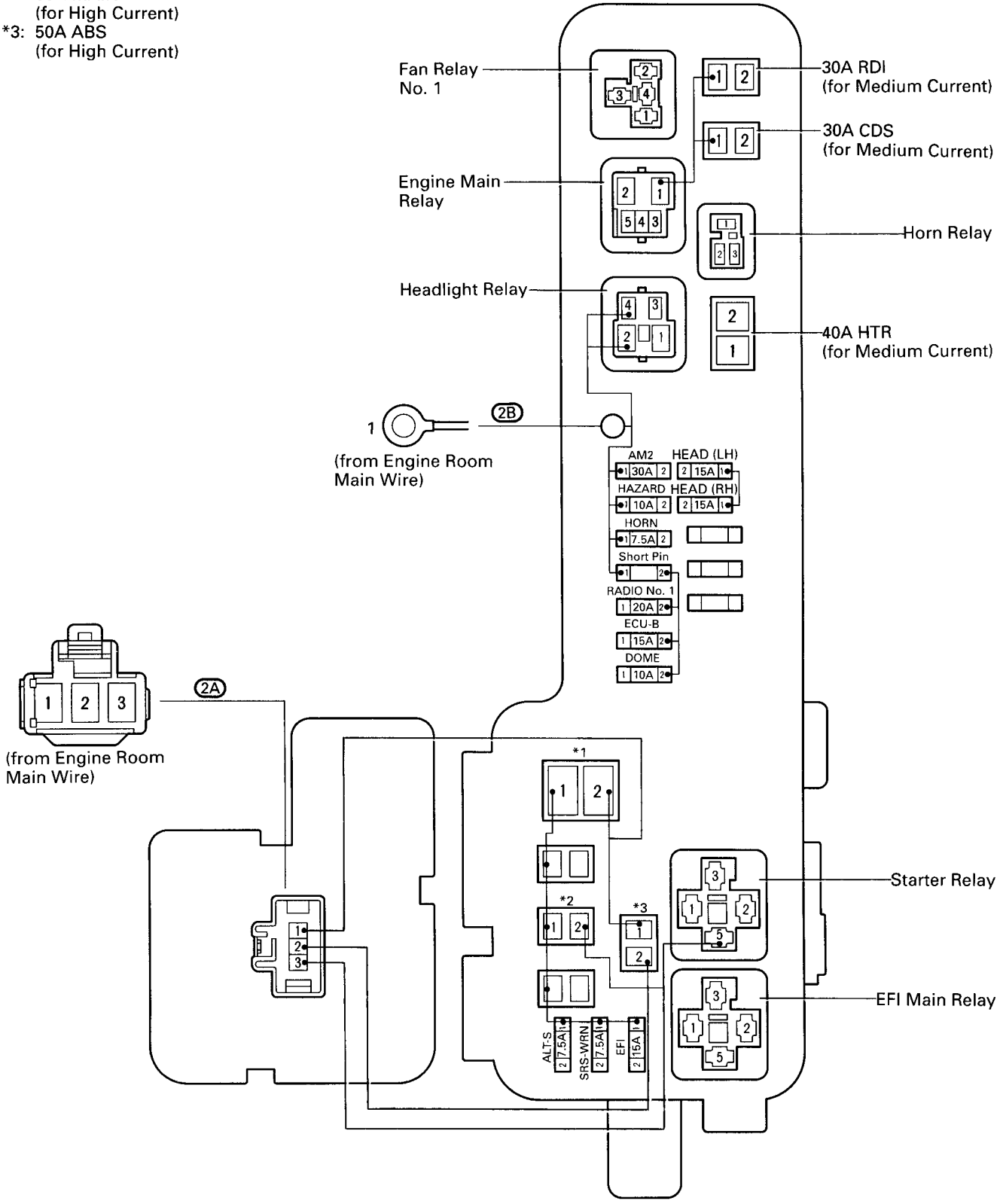

⑤ : R/B No. 5	Engine Compartment Front Right	(See Page 18)

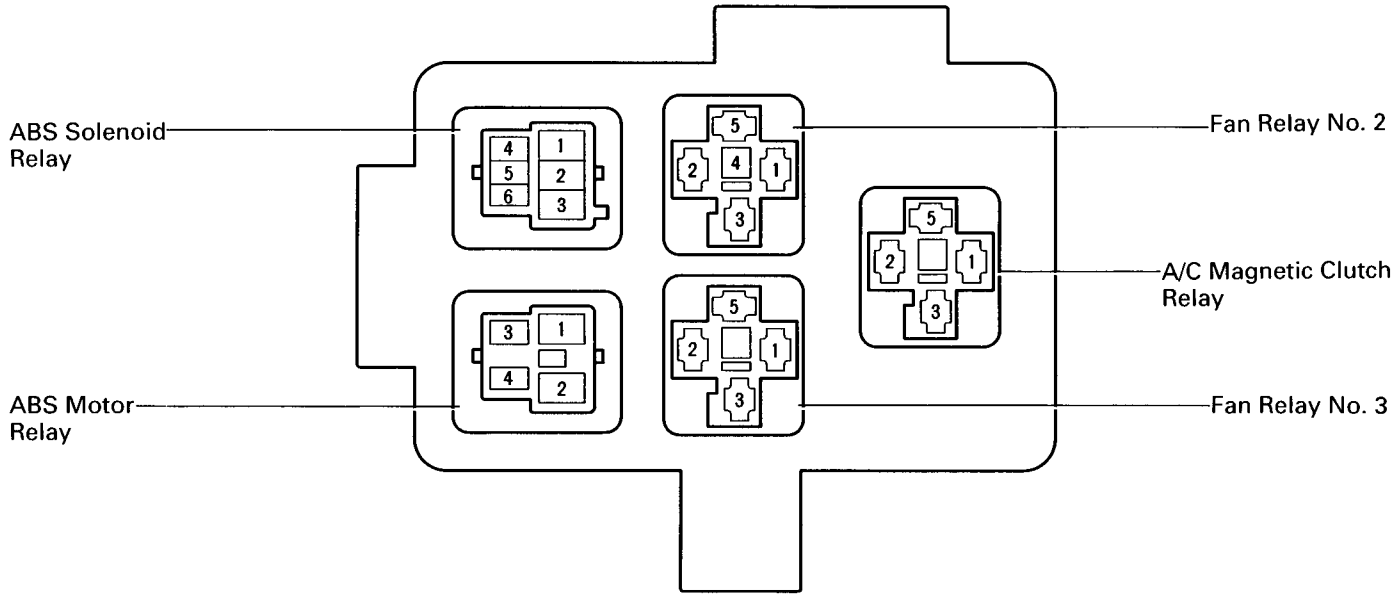

⑥ : R/B No. 6	Engine Compartment Front Left	(See Page 18)

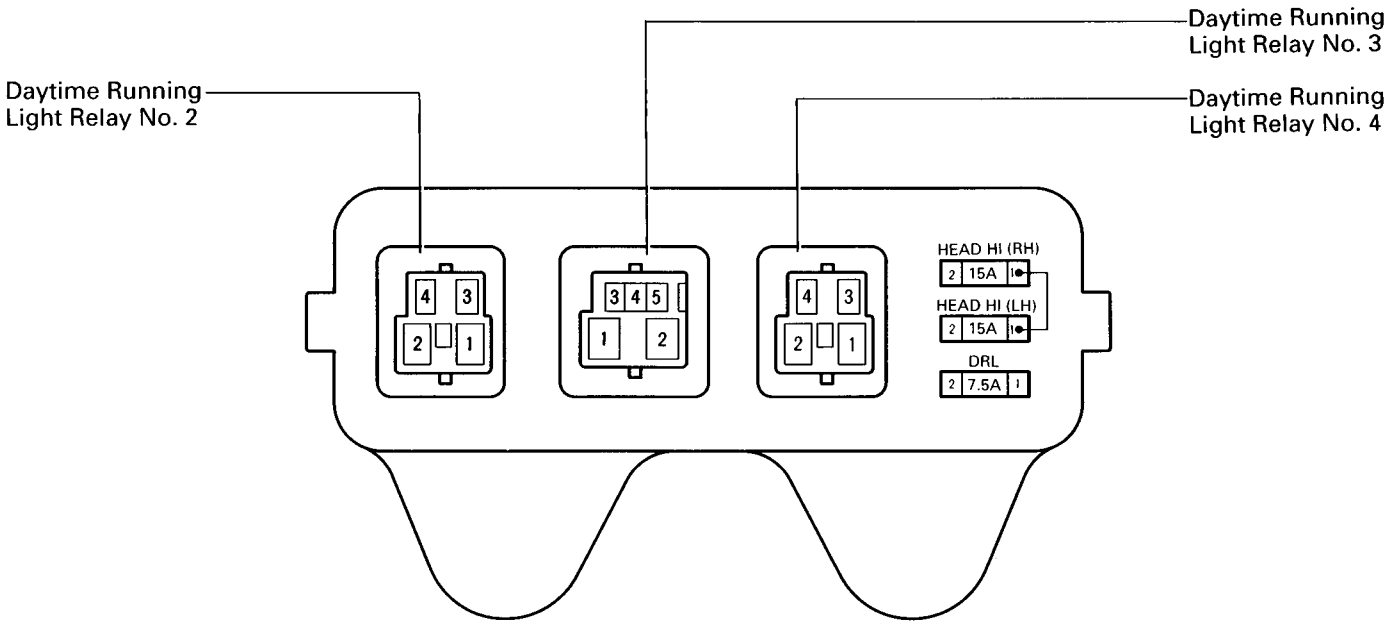

Position of Parts in Engine Compartment

[5S–FE]

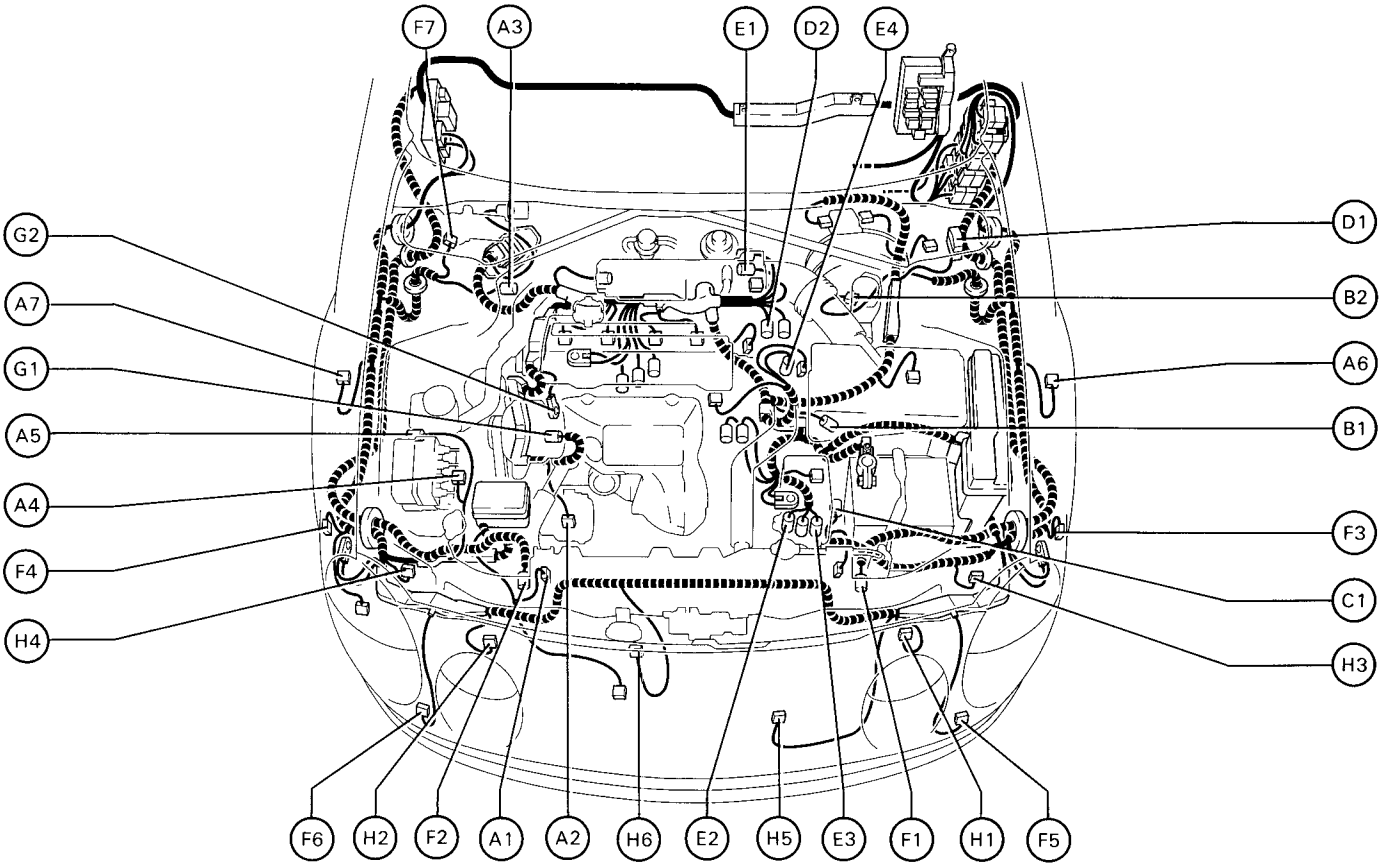

A 1 A/C Condenser Fan Motor
A 2 A/C Magnetic Clutch and Lock Sensor
A 3 A/C Triple Pressure SW (A/C Dual and Single Pressure SW)
A 4 ABS Actuator
A 5 ABS Actuator
A 6 ABS Speed Sensor Front LH
A 7 ABS Speed Sensor Front RH

B 1 Back–Up Light SW
B 2 Brake Fluid Level Warning SW

C 1 Cruise Control Actuator

D 1 Date Link Connector 1 (Check Connector)
D 2 Distributor

E 1 EGR Gas Temp. Sensor
E 2 Electronically Controlled Transmission Solenoid
E 3 Electronically Controlled Transmission Solenoid
E 4 Engine Coolant Temp. Sensor (EFI Water Temp. Sensor)

F 1 Front Airbag Sensor LH
F 2 Front Airbag Sensor RH
F 3 Front Side Marker Light LH
F 4 Front Side Marker Light RH
F 5 Front Turn Signal Light and Parking Light LH
F 6 Front Turn Signal Light and Parking Light RH
F 7 Front Wiper Motor

G 1 Generator (Alternator)
G 2 Generator (Alternator)

H 1 Headlight Hi LH
H 2 Headlight Hi RH
H 3 Headlight Lo LH
H 4 Headlight Lo RH
H 5 Horn LH
H 6 Horn RH

Position of Parts in Engine Compartment

[5S–FE]

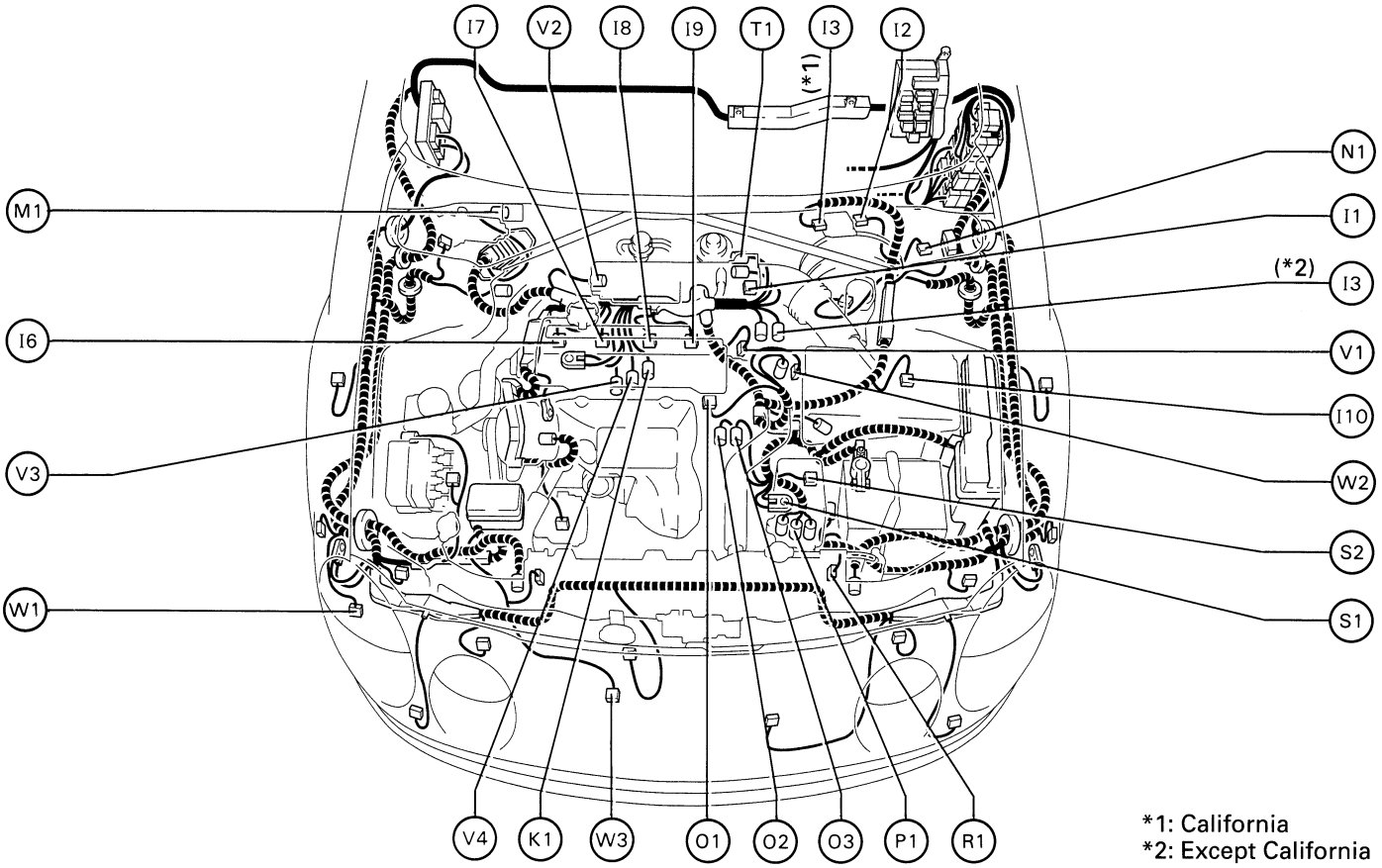

I	1	Idle Air Control Valve (ISC Valve)
I	2	Igniter
I	3	Ignition Coil
I	6	Injector No. 1
I	7	Injector No. 2
I	8	Injector No. 3
I	9	Injector No. 4
I	10	Intake Air Temp. Sensor
K	1	Knock Sensor
M	1	Manifold Absolute Pressure Sensor (Vacuum Sensor)
N	1	Noise Filter (for Ignition System)
O	1	Oil Pressure SW
O	2	Oxygen Sensor Main
O	3	Oxygen Sensor Sub
P	1	Park/Neutral Position SW (Neutral Start SW)
R	1	Radiator Fan Motor
S	1	Starter
S	2	Starter
T	1	Throttle Position Sensor
V	1	Vehicle Speed Sensor (Speed Sensor (for Combination Meter))
V	2	VSV (for A/C Idle–Up)
V	3	VSV (for EGR)
V	4	VSV (for Fuel Pressure–Up)
W	1	Washer Motor
W	2	Water Temp. Sender
W	3	Water Temp. SW (for Radiator Fan)

Position of Parts in Engine Compartment

[7A–FE]

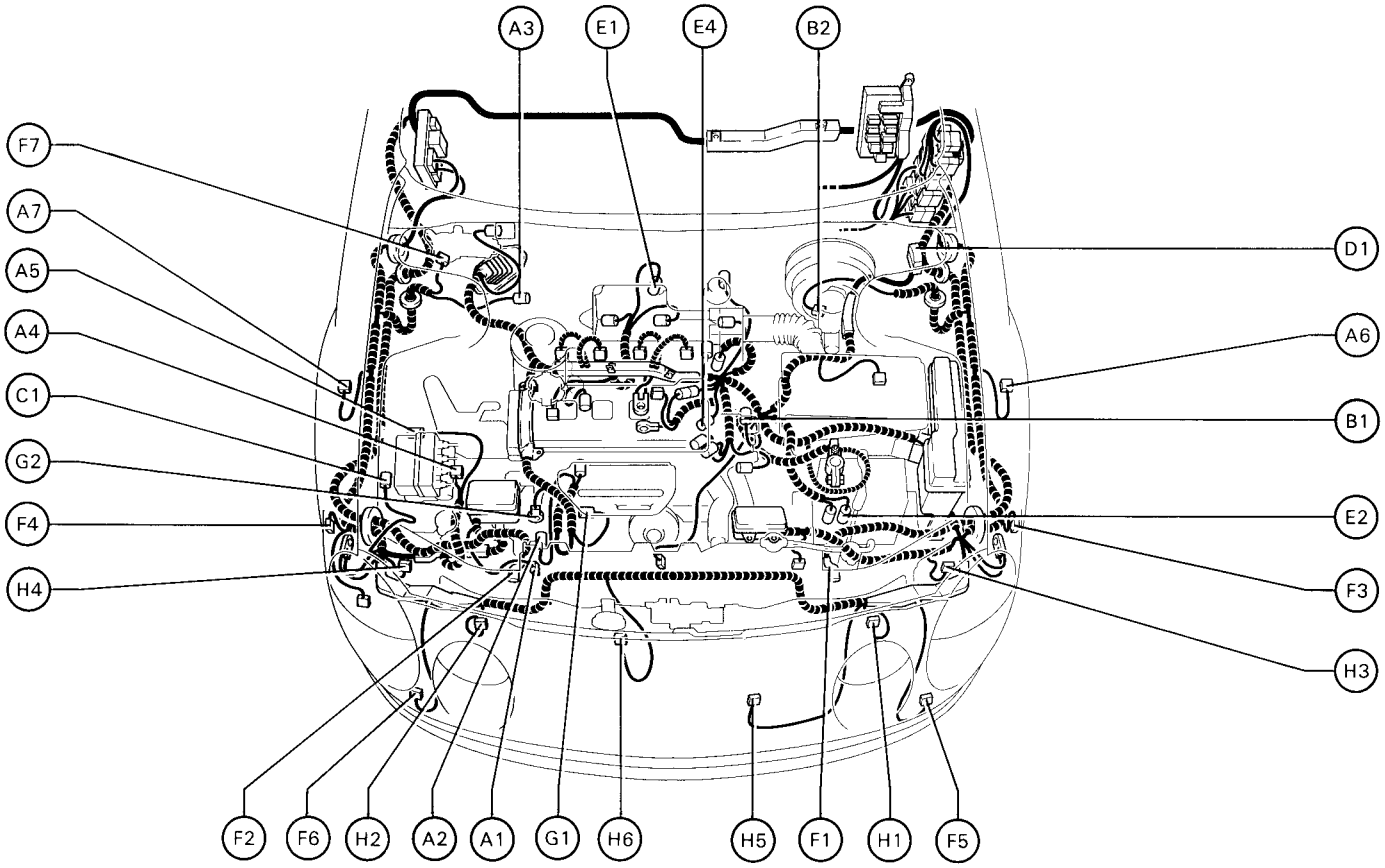

A 1 A/C Condenser Fan Motor
A 2 A/C Magnetic Clutch
A 3 A/C Triple Pressure SW (A/C Dual and Single Pressure SW)
A 4 ABS Actuator
A 5 ABS Actuator
A 6 ABS Speed Sensor Front LH
A 7 ABS Speed Sensor Front RH

B 1 Back–Up Light SW
B 2 Brake Fluid Level Warning SW

C 1 Cruise Control Actuator

D 1 Date Link Connector 1 (Check Connector)

E 1 EGR Gas Temp. Sensor
E 2 Electronically Controlled Transmission Solenoid
E 4 Engine Coolant Temp. Sensor (EFI Water Temp. Sensor)

F 1 Front Airbag Sensor LH
F 2 Front Airbag Sensor RH
F 3 Front Side Marker Light LH
F 4 Front Side Marker Light RH
F 5 Front Turn Signal Light and Parking Light LH
F 6 Front Turn Signal Light and Parking Light RH
F 7 Front Wiper Motor

G 1 Generator (Alternator)
G 2 Generator (Alternator)

H 1 Headlight Hi LH
H 2 Headlight Hi RH
H 3 Headlight Lo LH
H 4 Headlight Lo RH
H 5 Horn LH
H 6 Horn RH

Position of Parts in Engine Compartment

[7A–FE]

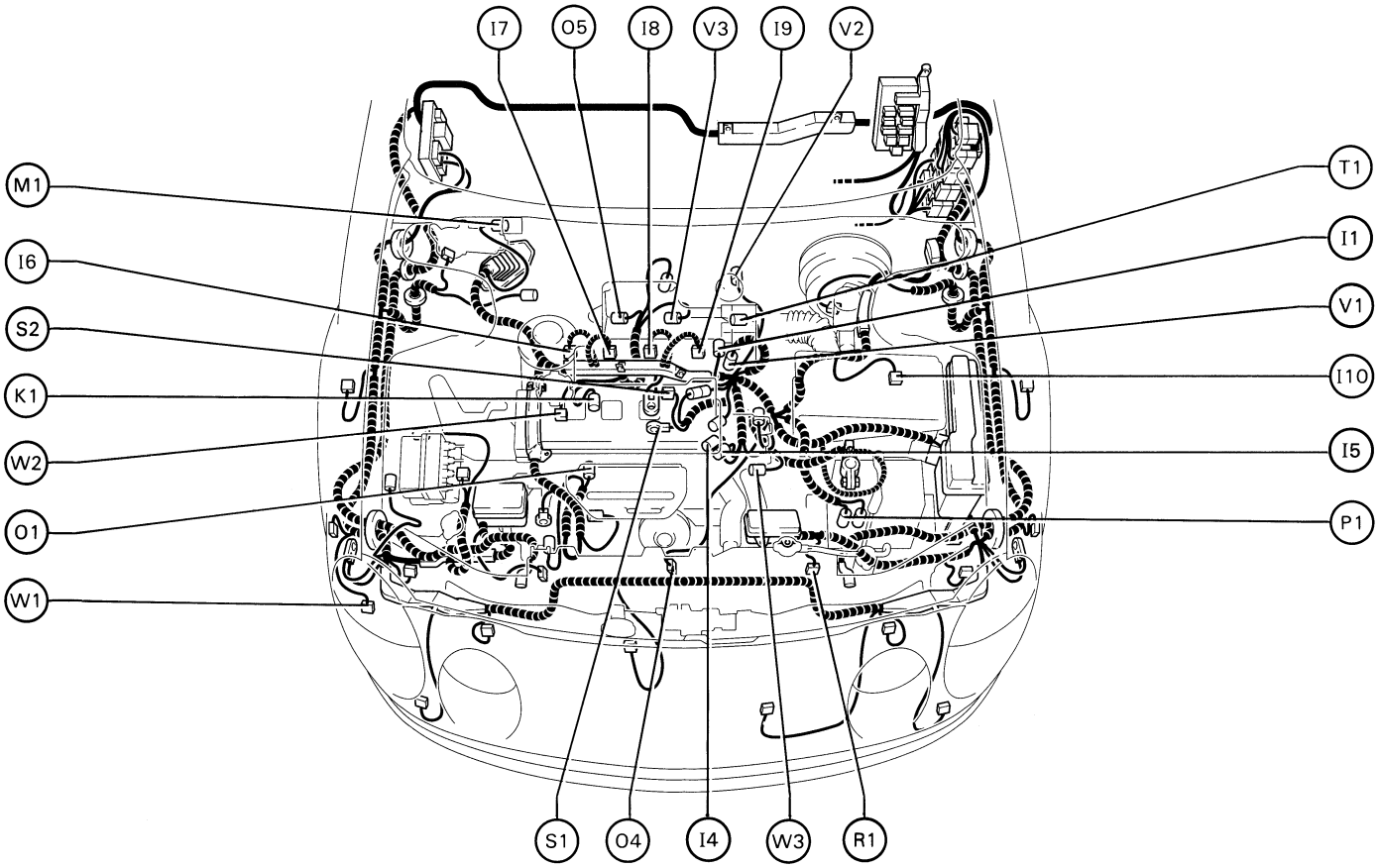

I	1	Idle Air Control Valve (ISC Valve)
I	4	IIA
I	5	IIA
I	6	Injector No.1
I	7	Injector No.2
I	8	Injector No.3
I	9	Injector No.4
I	10	Intake Air Temp. Sensor
K	1	Knock Sensor
M	1	Manifold Absolute Pressure Sensor (Vacuum Sensor)
O	1	Oil Pressure SW
O	4	Oxygen Sensor Main
O	5	Oxygen Sensor Sub
P	1	Park/Neutral Position SW (Neutral Start SW)
R	1	Radiator Fan Motor
S	1	Starter
S	2	Starter
T	1	Throttle Position Sensor
V	1	Vehicle Speed Sensor (Speed Sensor (for Combination Meter))
V	2	VSV (for A/C Idle–Up)
V	3	VSV (for EGR)
W	1	Washer Motor
W	2	Water Temp. Sender
W	3	Water Temp. SW (for Radiator Fan)

Position of Parts in Instrument Panel

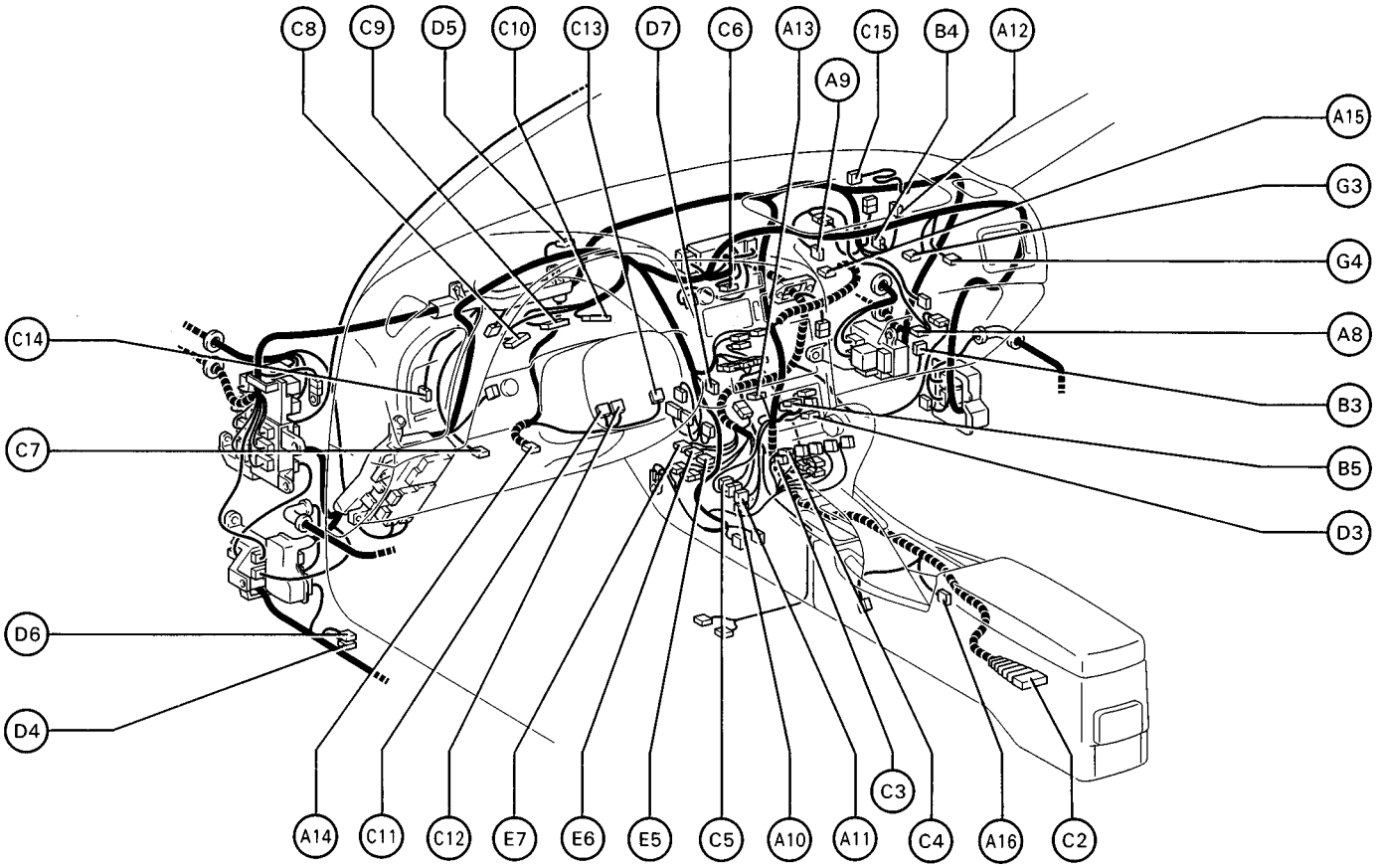

A 8 A/C Amplifier
A 9 A/C Thermistor
A 10 ABS ECU
A 11 ABS ECU
A 12 Air Inlet Control Servo Motor
A 13 Air Vent Mode Control Servo Motor
A 14 Airbag Squib (Steering Wheel Pad)
A 15 Airbag Squib (Front Passenger Airbag Assembly)
A 16 Ashtray Illumination

B 3 Blower Motor
B 4 Blower Resistor
B 5 Blower SW

C 2 Center Airbag Sensor Assembly
C 3 Cigarette Lighter
C 4 Cigarette Lighter Illumination
C 5 Circuit Opening Relay
C 6 Clock
C 7 Clutch Start SW
C 8 Combination Meter
C 9 Combination Meter
C 10 Combination Meter
C 11 Combination SW
C 12 Combination SW
C 13 Combination SW
C 14 Cruise Control Clutch SW
C 15 Cruise Control ECU

D 3 Daytime Running Light Relay (Main)
D 4 Diode (for Door Courtesy Light)
D 5 Diode (for Key Off Operation)
D 6 Diode (for Luggage Compartment Light)
D 7 Door Lock Control Relay

E 5 Engine Control Module (Engine and Electronically Controlled Transmission ECU (A/T)) or Engine Control Module (Engine ECU (M/T))
E 6 Engine Control Module (Engine and Electronically Controlled Transmission ECU (A/T)) or Engine Control Module (Engine ECU (M/T))
E 7 Engine Control Module (Engine and Electronically Controlled Transmission ECU (A/T)) or Engine Control Module (Engine ECU (M/T))

G 3 Glove Box Light
G 4 Glove Box Light SW

Position of Parts in Instrument Panel

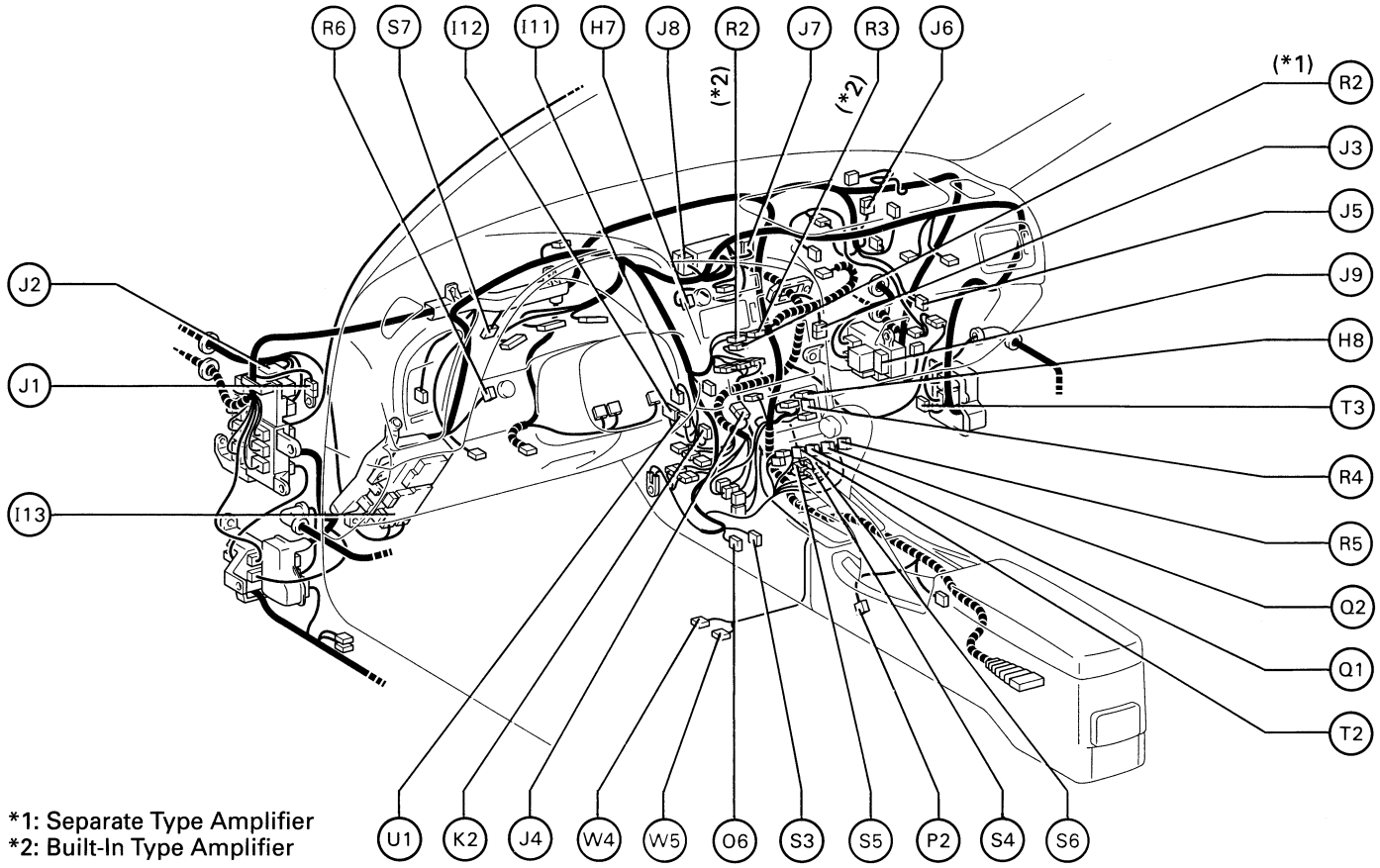

H 7 Hazard SW
H 8 Heater Control SW

I 11 Ignition Key Cylinder Light
I 12 Ignition SW
I 13 Integration Relay

J 1 Junction Connector (for Earth)
J 2 Junction Connector
J 3 Junction Connector
J 4 Junction Connector
J 5 Junction Connector
J 6 Junction Connector
J 7 Junction Connector
J 8 Junction Connector
J 9 Junction Connector (for Earth)

K 2 Key Interlock Solenoid

O 6 O/D Main SW

P 2 Parking Brake SW

Q 1 Quarter Power Window SW LH (Convertible)
Q 2 Quarter Power Window SW RH (Convertible)

R 2 Radio and Player
R 3 Radio and Player
R 4 Rear Window Defogger SW
R 5 Remote Control Mirror SW (w/o Power Window)
R 6 Rheostat

S 3 Shift Lock ECU
S 4 Stereo Component Amplifier
S 5 Stereo Component Amplifier
S 6 Stereo Component Amplifier
S 7 Stop Light SW

T 2 Top Stack Control SW (Convertible)
T 3 Top Stack Main Relay (Convertible)

U 1 Unlock Warning SW

W 4 Woofer Speaker Amplifier
W 5 Woofer Speaker Amplifier

Position of Parts in Body

[L/B]

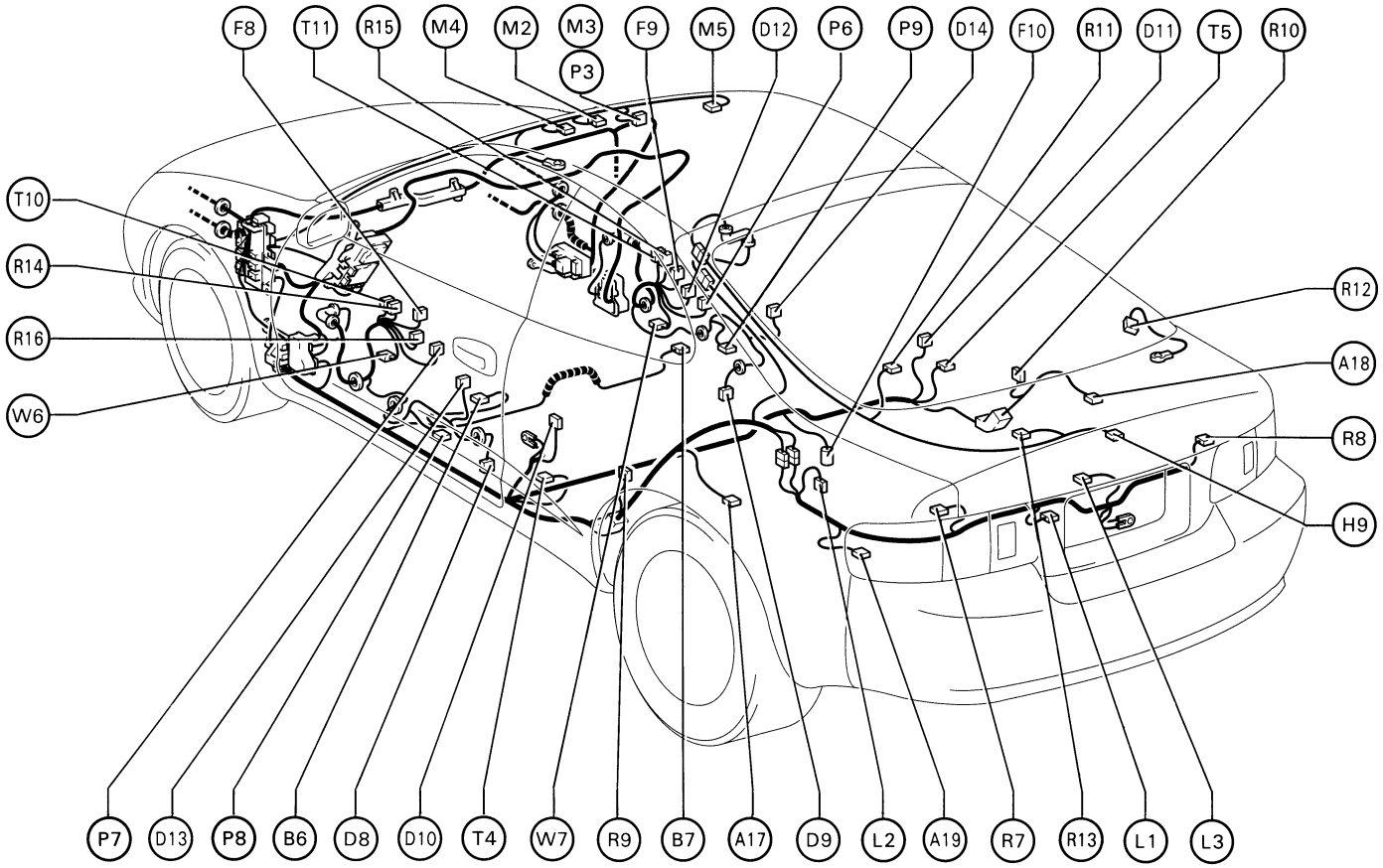

A 17 ABS Speed Sensor Rear LH
A 18 ABS Speed Sensor Rear RH
A 19 Auto Antenna Motor and Relay

B 6 Buckle SW LH
B 7 Buckle SW RH

D 8 Door Courtesy Light LH
D 9 Door Courtesy Light RH
D 10 Door Courtesy SW LH
D 11 Door Courtesy SW RH
D 12 Door Lock Control SW (Passenger's Side)
D 13 Door Lock Motor, Door Unlock Detection SW and Door Key Lock and Unlock SW LH
D 14 Door Lock Motor, Door Unlock Detection SW and Door Key Lock and Unlock SW RH

F 8 Front Door Speaker LH
F 9 Front Door Speaker RH
F 10 Fuel Sender and Pump

H 9 High Mounted Stop Light

L 1 License Plate Light
L 2 Luggage Compartment Light
L 3 Luggage Compartment Light SW

M 2 Moon Roof Control Relay
M 3 Moon Roof Control SW and Personal Light (w/Moon Roof)
M 4 Moon Roof Limit SW
M 5 Moon Roof Motor

Position of Parts in Instrument Body

[C/P]

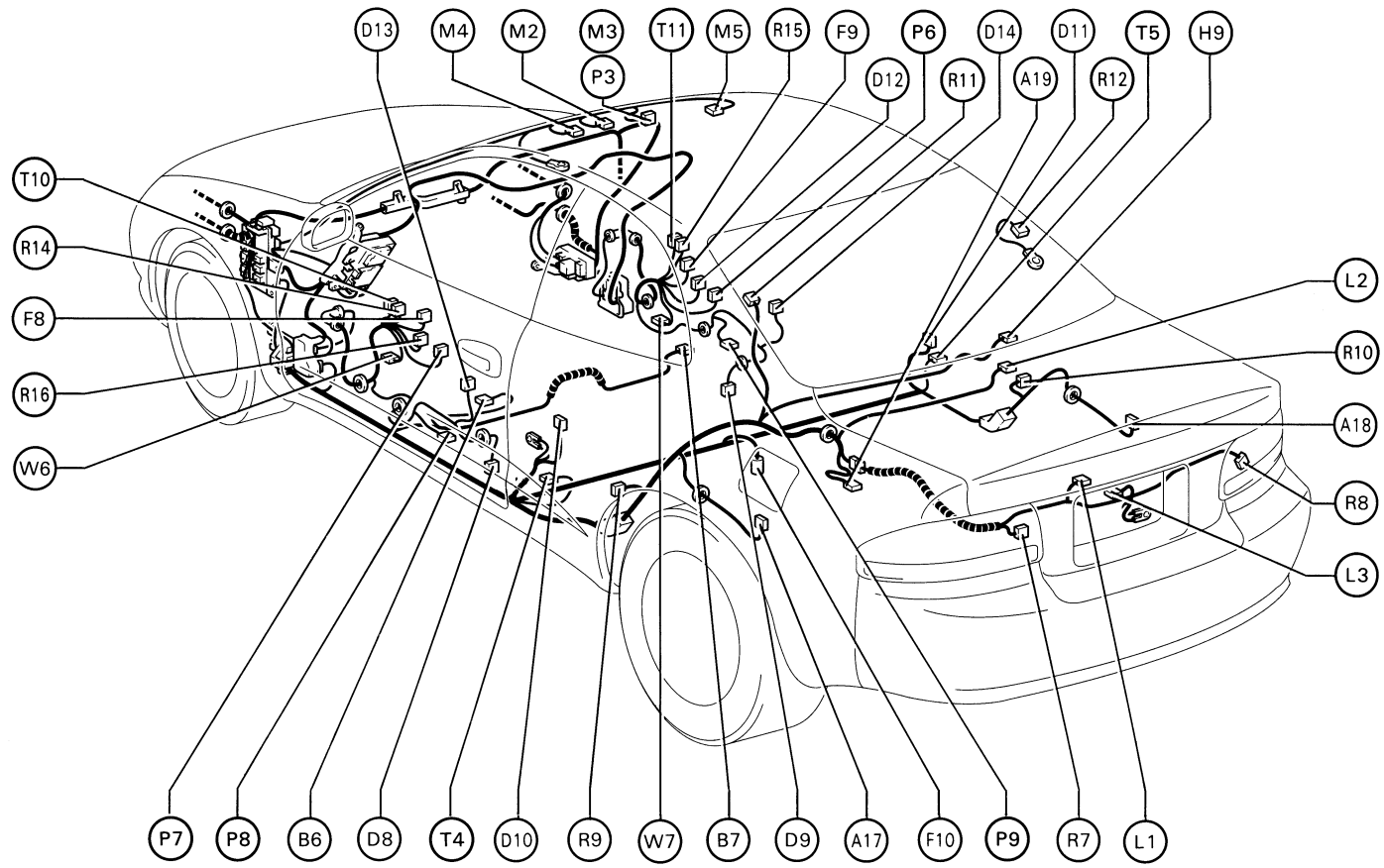

P 3 Personal Light (w/o Moon Roof)
P 6 Power Window Control SW (Passenger's Side)
P 7 Power Window Master SW
P 8 Power Window Motor LH
P 9 Power Window Motor RH

R 7 Rear Combination Light LH
R 8 Rear Combination Light RH
R 9 Rear Speaker LH
R 10 Rear Speaker RH
R 11 Rear Window Defogger (+)
R 12 Rear Window Defogger (–)
R 13 Rear Wiper Motor and Relay (L/B)
R 14 Remote Control Mirror LH
R 15 Remote Control Mirror RH
R 16 Remote Control Mirror SW (w/ Power Window)

T 4 Tension Reducer Solenoid LH
T 5 Tension Reducer Solenoid RH
T 10 Tweeter Speaker LH
T 11 Tweeter Speaker RH

W 6 Woofer Speaker LH
W 7 Woofer Speaker RH

Position of Parts in Body

[Convertible]

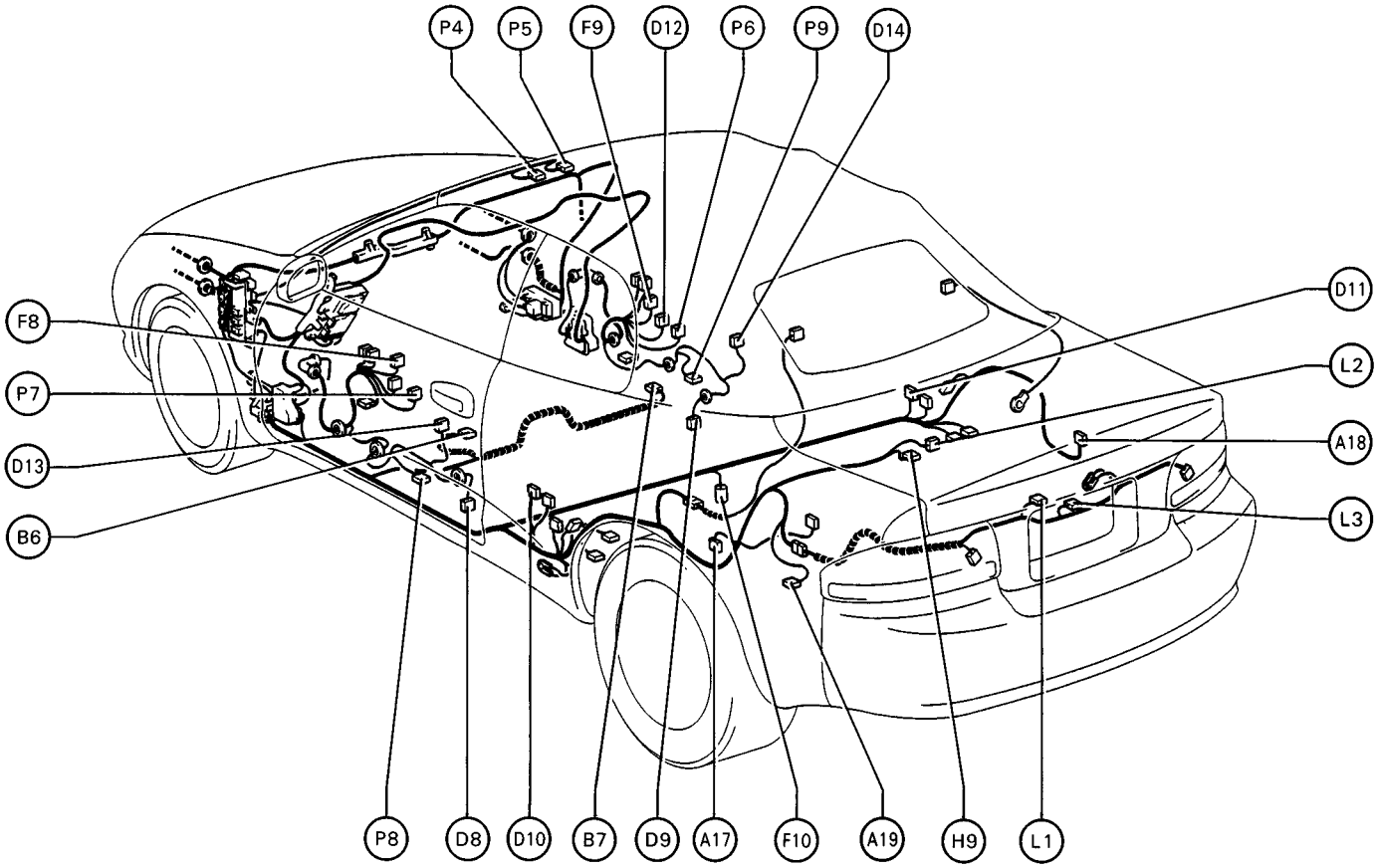

A 17 ABS Speed Sensor Rear LH
A 18 ABS Speed Sensor Rear RH
A 19 Auto Antenna Motor and Relay

B 6 Buckle SW LH
B 7 Buckle SW RH

D 8 Door Courtesy Light LH
D 9 Door Courtesy Light RH
D 10 Door Courtesy SW LH
D 11 Door Courtesy SW RH
D 12 Door Lock Control SW (Passenger's Side)
D 13 Door Lock Motor, Door Unlock Detection SW and Door Key Lock and Unlock SW LH
D 14 Door Lock Motor, Door Unlock Detection SW and Door Key Lock and Unlock SW RH

F 8 Front Door Speaker LH
F 9 Front Door Speaker RH
F 10 Fuel Sender and Pump

H 9 High Mounted Stop Light

L 1 License Plate Light
L 2 Luggage Compartment Light
L 3 Luggage Compartment Light SW

P 4 Personal Light LH
P 5 Personal Light RH
P 6 Power Window Control SW (Passenger's Side)
P 7 Power Window Master SW
P 8 Power Window Motor LH
P 9 Power Window Motor RH

Position of Parts in Instrument Body

[Convertible]

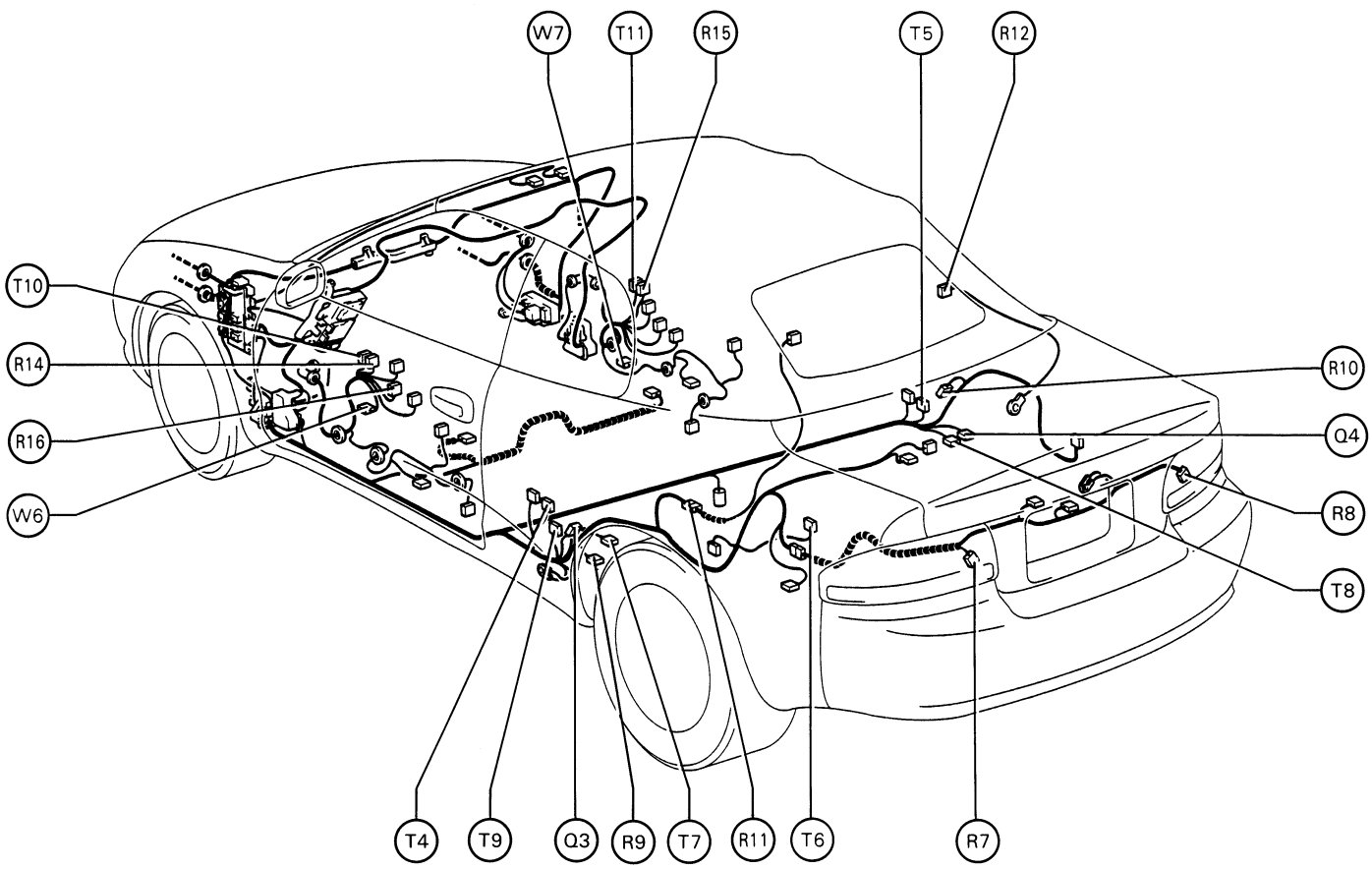

Q 3 Quarter Power Window Motor LH
Q 4 Quarter Power Window Motor RH

R 7 Rear Combination Light LH
R 8 Rear Combination Light RH
R 9 Rear Speaker LH
R 10 Rear Speaker RH
R 11 Rear Window Defogger (+)
R 12 Rear Window Defogger (–)
R 14 Remote Control Mirror LH
R 15 Remote Control Mirror RH
R 16 Remote Control Mirror SW (w/ Power Window)

T 4 Tension Reducer Solenoid LH
T 5 Tension Reducer Solenoid RH
T 6 Top Stack Bypass SW
T 7 Top Stack Motor LH
T 8 Top Stack Motor RH
T 9 Top Stack Relay
T 10 Tweeter Speaker LH
T 11 Tweeter Speaker RH

W 6 Woofer Speaker LH
W 7 Woofer Speaker RH

POWER SOURCE (Current Flow Chart)

The chart below shows the route by which current flows from the battery to each electrical source (Fusible Link, Circuit Breaker, Fuse, etc.) and other parts.

The next page and following pages show the parts to which each electrical source outputs current.

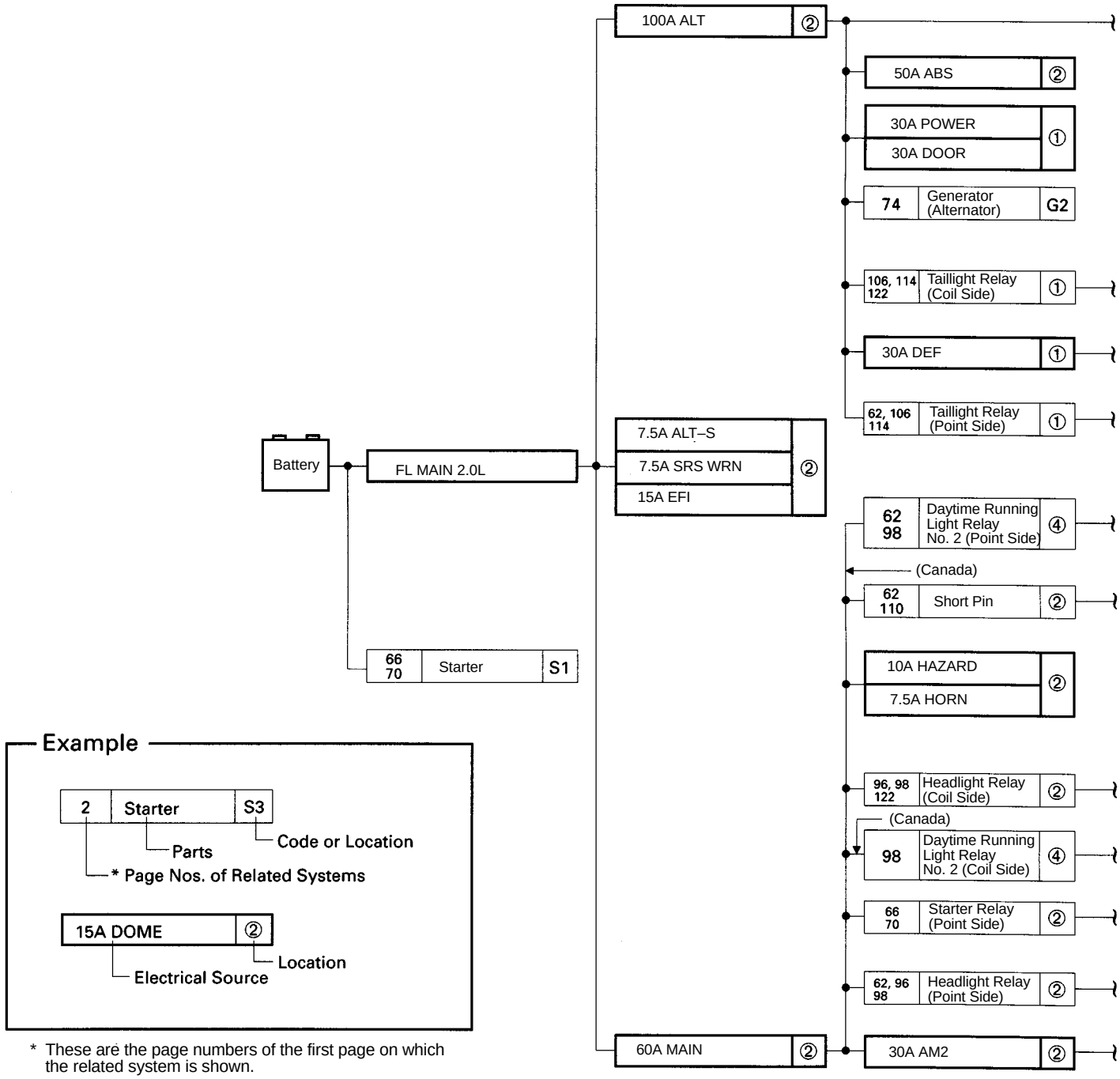

Example

* These are the page numbers of the first page on which the related system is shown.
The part indicated is located somewhere in the system, not necessarily on the page indicated here.

[LOCATION] (1) : Inpane J/B (See page 20)

(2) : R/B No. 2, J/B No. 2 (See page 26)

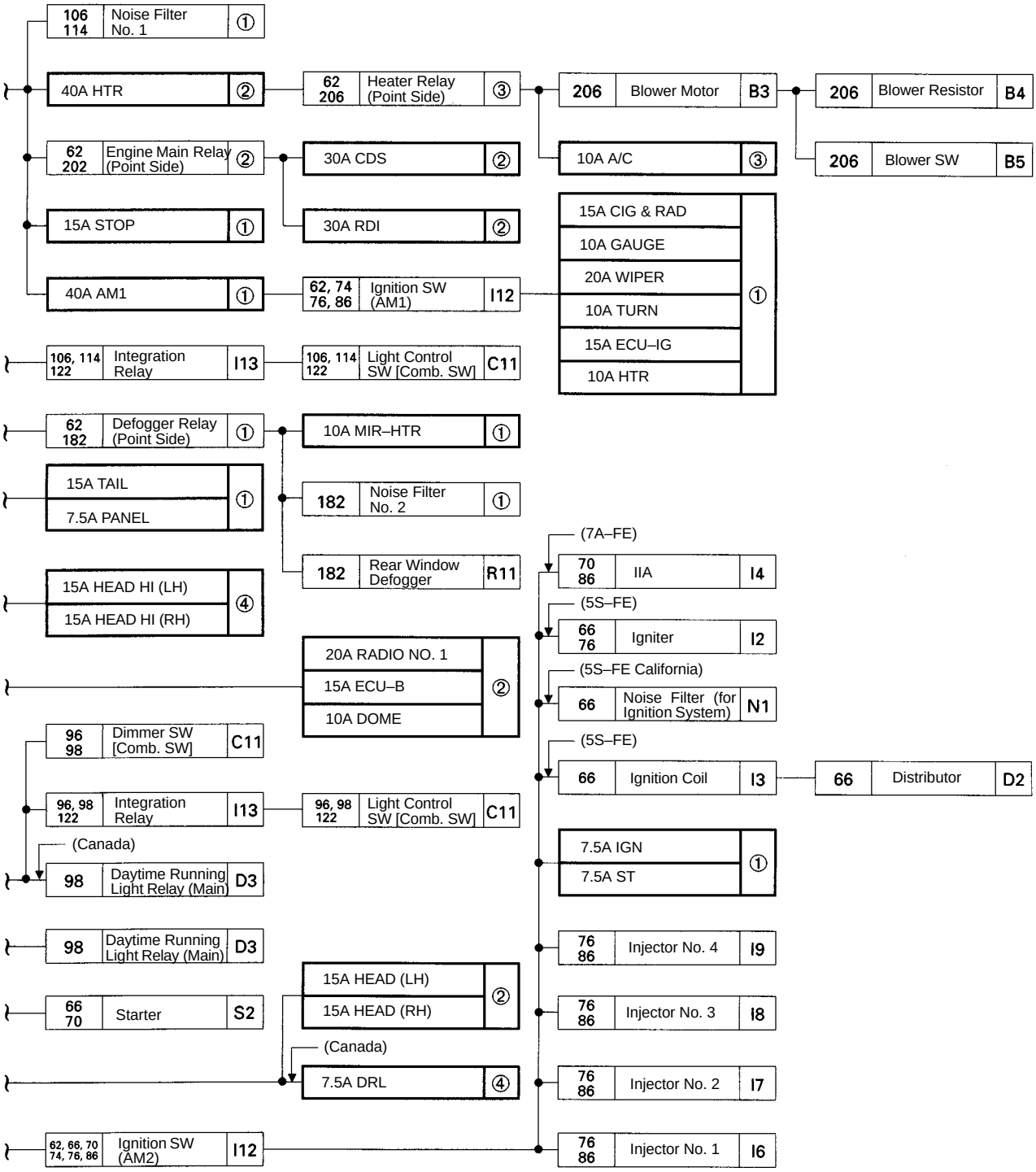

[LOCATION] (3) : R/B No. 4
(See page 25)

(4) : R/B No. 6
(See page 27)

POWER SOURCE (Current Flow Chart)

Location	CB or Fuse		*Page Nos. of Related Systems	202	206	206	202 206	160	206	160	160	206	206	106	184	120	206	180	180	165	152	106	76 86	152	66 70 76 86
			Parts	A/C Condenser Fan Motor	A/C Magnetic Clutch and Lock Sensor (5S–FE)	A/C Magnetic Clutch (7A–FE)	A/C Triple Pressure SW (A/C Dual and Single Pressure SW)	ABS Actuator	A/C Amplifier	ABS ECU	ABS ECU	Air Inlet Control Servo Motor	Air Vent Mode Control Servo Motor	Ashtray Illumination	Auto Antenna Motor and Relay	Back–Up Light SW	Blower SW	Buckle SW LH	Buckle SW RH	Center Airbag Sensor Assembly	Cigarette Lighter	Cigarette Lighter Illumination	Circuit Opening Relay	Clock	Clutch Start SW
			Code or Location	A1	A2	A2	A3	A5	A8	A10	A11	A12	A13	A16	A19	B1	B5	B6	B7	C2	C3	C4	C5	C6	C7
①	30A	DOOR																							
	30A	POWER																							
	20A	WIPER																							
	15A	CIG & RAD													●					●	●			●	
	15A	ECU–IG					●			●															
	15A	STOP								●															
	15A	TAIL																							
	10A	GAUGE									●				●	●		●	●						
	10A	HTR		●	●				●			●	●				●								
	10A	MIR–HTR																							
	10A	TURN																							
	7.5A	IGN																		●					
	7.5A	PANEL												●								●		●	
	7.5A	ST																					●		●
③	50A	ABS						●																	
	30A	CDS	●																						
	30A	RDI																							
	20A	RADIO NO. 1																							
	15A	ECU–B								●															
	15A	EFI																					●		
	15A	HEAD (LH) (USA)																							
	15A	HEAD (RH) (USA)																							
	15A	HEAD (LH) (CANADA)																							
	15A	HEAD (RH) (CANADA)																							
	10A	DOME													●									●	
	10A	HAZARD																							
	7.5A	ALT–S																							
	7.5A	HORN																							
	7.5A	SRS WRN																			●				
④	10A	A/C					●		●																
⑥	15A	HEAD HI (LH) (CANADA)																							
	15A	HEAD HI (RH) (CANADA)																							
	7.5A	DRL																							

* These are the page numbers of the first page on which the related system is shown.
The part indicated is located somewhere in the system, not necessarily on the page indicated here.

[LOCATION] (1) : Inpane J/B (See page 20) (2) : R/B No. 1 (See page 25) (3) : R/B No. 2, J/B No. 2 (See page 26)
(4) : R/B No. 4 (See page 25) (5) : R/B No. 5 (See page 27) (6) R/B No. 6 (See page 27)

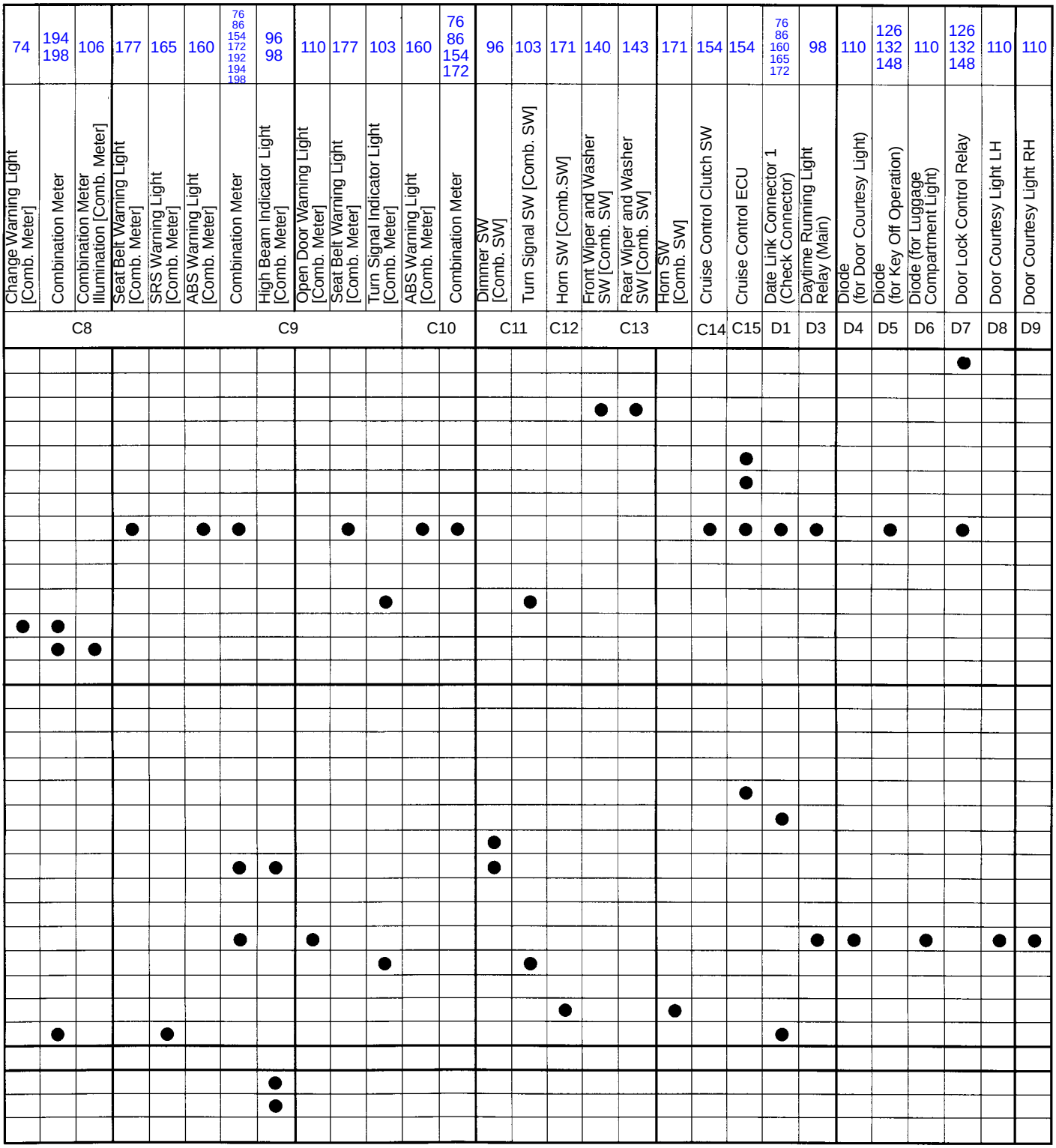
74
194 198
106
177
165
160
76 86 154 172 192 194 198
96 98
110
177
103
160
76 86 154 172
96
103
171
140
143
171
154
154
76 86 160 165 172
98
110
126 132 148
110
126 132 148
110
110
Change Warning Light [Comb. Meter]
Combination Meter
Combination Meter Illumination [Comb. Meter]
Seat Belt Warning Light [Comb. Meter]
SRS Warning Light [Comb. Meter]
ABS Warning Light [Comb. Meter]
Combination Meter
High Beam Indicator Light [Comb. Meter]
Open Door Warning Light [Comb. Meter]
Seat Belt Warning Light [Comb. Meter]
Turn Signal Indicator Light [Comb. Meter]
ABS Warning Light [Comb. Meter]
Combination Meter
Dimmer SW [Comb. SW]
Turn Signal SW [Comb. SW]
Horn SW [Comb.SW]
Front Wiper and Washer SW [Comb. SW]
Rear Wiper and Washer SW [Comb. SW]
Horn SW [Comb. SW]
Cruise Control Clutch SW
Cruise Control ECU
Date Link Connector 1 (Check Connector)
Daytime Running Light Relay (Main)
Diode (for Door Courtesy Light)
Diode (for Key Off Operation)
Diode (for Luggage Compartment Light)
Door Lock Control Relay
Door Courtesy Light LH
Door Courtesy Light RH
C8
C9
C10
C11
C12
C13
C14
C15
D1
D3
D4
D5
D6
D7
D8
D9

POWER SOURCE (Current Flow Chart)

Location	CB or Fuse		*Page Nos. of Related Systems	126 132 148	110 126 132 148	132	132	132	86 172	66 76 172 70 86 182	114	114	103 114	103 114	140	76 86	74	106	106	96 98	96 98
			Parts	Door Courtesy SW LH	Door Courtesy SW RH	Door Lock Control SW (for Passenger's Side)	Door Lock Motor, Door Unlock Detection SW and Door Key Lock and Unlock SW LH	Door Lock Motor, Door Unlock Detection SW and Door Key Lock and Unlock SW RH	Engine Control Module (Engine and Electronically Controlled Transmission ECU (A/T), Engine ECU (M/T))	Engine Control Module (Engine and Electronically Controlled Transmission ECU (A/T), Engine ECU (M/T))	Front Side Marker Light LH	Front Side Marker Light RH	Front Turn Signal Light and Parking Light LH	Front Turn Signal Light and Parking Light RH	Front Wiper Motor	Fuel Sender and Pump	Generator (Alternator)	Glove Box Light	Glove Box Light SW	Headlight Hi LH	Headlight Hi RH
			Code or Location	D10	D11	D12	D13	D14	E5	E7	F3	F4	F5	F6	F7	F10	G1	G3	G4	H1	H2
①	30A	DOOR			●		●	●													
	30A	POWER																			
	20A	WIPER													●						
	15A	CIG & RAD																			
	15A	ECU–IG																			
	15A	STOP								●											
	15A	TAIL								●	●	●	●	●							
	10A	GAUGE	●	●				●		●							●				
	10A	HTR																			
	10A	MIR–HTR								●											
	10A	TURN											●	●							
	7.5A	IGN															●				
	7.5A	PANEL																●	●		
	7.5A	ST							●	●											
③	50A	ABS																			
	30A	CDS																			
	30A	RDI																			
	20A	RADIO NO. 1																			
	15A	ECU–B																			
	15A	EFI							●	●						●					
	15A	HEAD (LH) (USA)																		●	
	15A	HEAD (RH) (USA)																			●
	15A	HEAD (LH) (CANADA)																			
	15A	HEAD (RH) (CANADA)																			
	10A	DOME	●	●																	
	10A	HAZARD											●	●							
	7.5A	ALT–S															●				
	7.5A	HORN																			
	7.5A	SRS WRN																			
④	10A	A/C																			
⑥	15A	HEAD HI (LH) (CANADA)																		●	●
	15A	HEAD HI (RH) (CANADA)																			
	7.5A	DRL																			

* These are the page numbers of the first page on which the related system is shown.
The part indicated is located somewhere in the system, not necessarily on the page indicated here.

[LOCATION] (1) : Inpane J/B (See page 20) (2) : R/B No. 1 (See page 25) (3) : R/B No. 2, J/B No. 2 (See page 26)
(4) : R/B No. 4 (See page 25) (5) : R/B No. 5 (See page 27) (6) R/B No. 6 (See page 27)

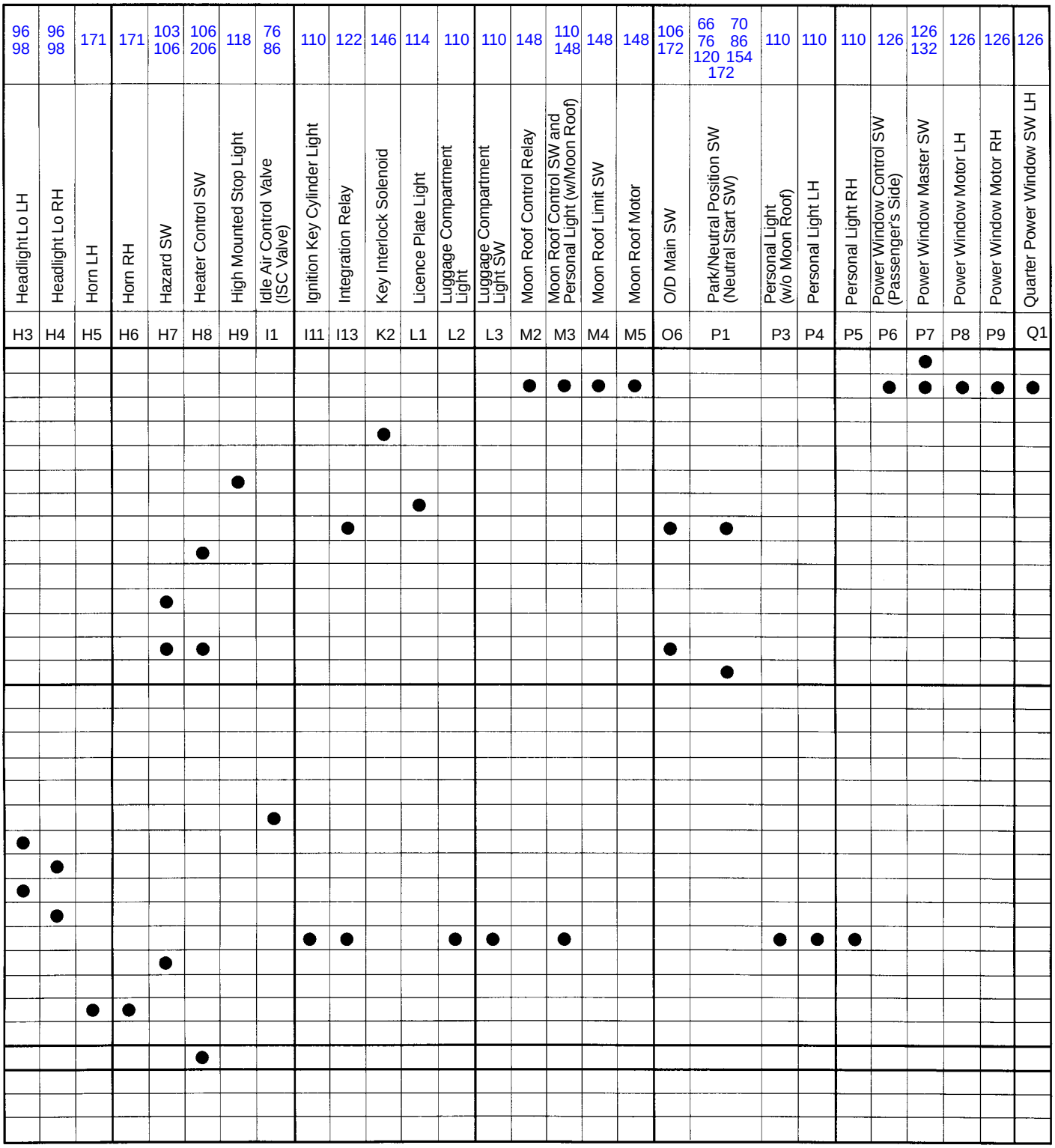
96 98
96 98
171
171
103 106
106 206
118
76 86
110
122
146
114
110
110
148
110 148
148
148
106 172
66 70 76 86 120 154 172
110
110
110
126
126 132
126
126
126
Headlight Lo LH
Headlight Lo RH
Horn LH
Horn RH
Hazard SW
Heater Control SW
High Mounted Stop Light
Idle Air Control Valve (ISC Valve)
Ignition Key Cylinder Light
Integration Relay
Key Interlock Solenoid
Licence Plate Light
Luggage Compartment Light
Luggage Compartment Light SW
Moon Roof Control Relay
Moon Roof Control SW and Personal Light (w/Moon Roof)
Moon Roof Limit SW
Moon Roof Motor
O/D Main SW
Park/Neutral Position SW (Neutral Start SW)
Personal Light (w/o Moon Roof)
Personal Light LH
Personal Light RH
Power Window Control SW (Passenger's Side)
Power Window Master SW
Power Window Motor LH
Power Window Motor RH
Quarter Power Window SW LH
H3
H4
H5
H6
H7
H8
H9
I1
I11
I13
K2
L1
L2
L3
M2
M3
M4
M5
O6
P1
P3
P4
P5
P6
P7
P8
P9
Q1

POWER SOURCE (Current Flow Chart)

Location	CB or Fuse		*Page Nos. of Related Systems	126	126	126	202	106	106 184 190	106 182	138	106	120	103	118	114	120	103	118	114	143	136 138	136 138	136	146
			Parts	Quarter Power Window SW RH	Quarter Power Window Motor LH	Quarter Power Window Motor RH	Radiator Fan Motor	Radio and Player	Radio and Player	Rear Window Defogger SW	Remote Control Mirror SW (w/o Power Window)	Rheostat	Back–Up Light LH [Rear Comb. Light LH]	Rear Turn Signal Light LH [Rear Comb. Light LH]	Stop Light LH [Rear Comb. Light LH]	Taillight and Rear Side Marker Light LH [Rear Comb. Light LH]	Back–Up Light RH [Rear Comb. Light RH]	Rear Turn Signal Light RH [Rear Comb. Light RH]	Stop Light RH [Rear Comb. Light RH]	Taillight and Rear Side Marker Light RH [Rear Comb. Light RH]	Rear Wiper Motor and Relay	Remote Control Mirror LH	Remote Control Mirror RH	Remote Control Mirror SW (w/ Power Window)	Shift Lock ECU
			Code or Location	Q2	Q3	Q4	R1	R2	R3	R4	R5	R6	R7					R8				R13	R14	R15	R16	S3
①	30A	DOOR																								
	30A	POWER	●	●	●																				
	20A	WIPER																			●				
	15A	CIG & RAD						●		●												●	●	●	●
	15A	ECU–IG																							●
	15A	STOP											●						●						●
	15A	TAIL													●					●					
	10A	GAUGE											●				●								
	10A	HTR								●															
	10A	MIR–HTR																							
	10A	TURN												●				●							
	7.5A	IGN																							
	7.5A	PANEL						●	●	●		●													
	7.5A	ST																							
③	50A	ABS																							
	30A	CDS					●																		
	30A	RDI					●																		
	20A	RADIO NO. 1							●																
	15A	ECU–B																							
	15A	EFI																							
	15A	HEAD (LH) (USA)																							
	15A	HEAD (RH) (USA)																							
	15A	HEAD (LH) (CANADA)																							
	15A	HEAD (RH) (CANADA)																							
	10A	DOME																							
	10A	HAZARD												●				●							
	7.5A	ALT–S																							
	7.5A	HORN																							
	7.5A	SRS WRN																							
④	10A	A/C																							
⑥	15A	HEAD HI (LH) (CANADA)																							
	15A	HEAD HI (RH) (CANADA)																							
	7.5A	DRL																							

* These are the page numbers of the first page on which the related system is shown.
The part indicated is located somewhere in the system, not necessarily on the page indicated here.

[LOCATION] (1) : Inpane J/B (See page 20) (2) : R/B No. 1 (See page 25) (3) : R/B No. 2, J/B No. 2 (See page 26)
(4) : R/B No. 4 (See page 25) (5) : R/B No. 5 (See page 27) (6) R/B No. 6 (See page 27)

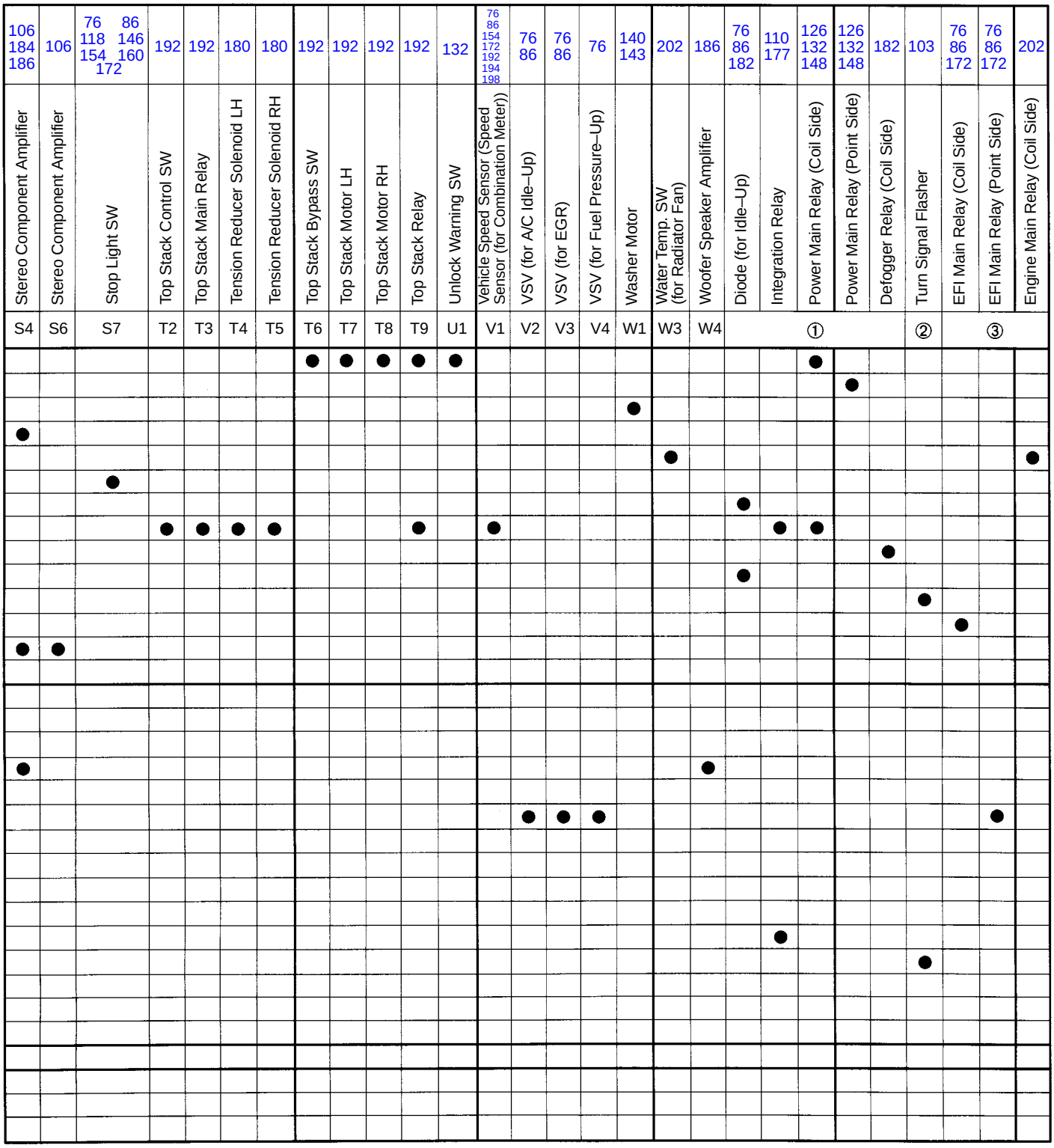
106 184 186
106
76 86 118 146 154 160 172
192
192
180
180
192
192
192
192
132
76 86 154 172 192 194 198
76 86
76 86
76
140 143
202
186
76 86 182
110 177
126 132 148
126 132 148
182
103
76 86 172
76 86 172
202
Stereo Component Amplifier
Stereo Component Amplifier
Stop Light SW
Top Stack Control SW
Top Stack Main Relay
Tension Reducer Solenoid LH
Tension Reducer Solenoid RH
Top Stack Bypass SW
Top Stack Motor LH
Top Stack Motor RH
Top Stack Relay
Unlock Warning SW
Vehicle Speed Sensor (Speed Sensor (for Combination Meter))
VSV (for A/C Idle–Up)
VSV (for EGR)
VSV (for Fuel Pressure–Up)
Washer Motor
Water Temp. SW (for Radiator Fan)
Woofer Speaker Amplifier
Diode (for Idle–Up)
Integration Relay
Power Main Relay (Coil Side)
Power Main Relay (Point Side)
Defogger Relay (Coil Side)
Turn Signal Flasher
EFI Main Relay (Coil Side)
EFI Main Relay (Point Side)
Engine Main Relay (Coil Side)
S4
S6
S7
T2
T3
T4
T5
T6
T7
T8
T9
U1
V1
V2
V3
V4
W1
W3
W4
①
②
③

POWER SOURCE (Current Flow Chart)

Location	CB or Fuse		*Page Nos. of Related Systems	202	202	171	66 70 76 86	206	206	160	160	202	202	202	202	98	98	98	98
			Parts	Fan Relay No. 1 (Coil Side)	Fan Relay No. 1 (Point Side)	Horn Relay	Starter Relay (Coil Side)	Heater Relay (Coil Side)	A/C Magnetic Clutch Relay	ABS Motor Relay (Point Side)	ABS Solenoid Relay (Point Side)	Fan Relay No. 2 (Coil Side)	Fan Relay No. 2 (Point Side)	Fan Relay No. 3 (Coil Side)	Fan Relay No. 3 (Point Side)	Daytime Running Light Relay No. 3 (Coil Side)	Daytime Running Light Relay No. 3 (Point Side)	Daytime Running Light Relay No. 4 (Coil Side)	Daytime Running Light Relay No. 4 (Point Side)
			Code or Location	③				④	⑤							⑥			
①	30A	DOOR																	
	30A	POWER																	
	20A	WIPER																	
	15A	CIG & RAD																	
	15A	ECU–IG		●								●							
	15A	STOP																	
	15A	TAIL																	
	10A	GAUGE									●								
	10A	HTR						●	●					●					
	10A	MIR–HTR																	
	10A	TURN																	
	7.5A	IGN																	
	7.5A	PANEL																	
	7.5A	ST					●												
③	50A	ABS								●	●								
	30A	CDS											●		●				
	30A	RDI			●														
	20A	RADIO NO. 1																	
	15A	ECU–B																	
	15A	EFI																	
	15A	HEAD (LH) (USA)																	
	15A	HEAD (RH) (USA)																	
	15A	HEAD (LH) (CANADA)																	
	15A	HEAD (RH) (CANADA)																	
	10A	DOME																	
	10A	HAZARD																	
	7.5A	ALT–S																	
	7.5A	HORN				●													
	7.5A	SRS WRN																	
④	10A	A/C																	
⑥	15A	HEAD HI (LH) (CANADA)																	●
	15A	HEAD HI (RH) (CANADA)															●		●
	7.5A	DRL														●		●	

* These are the page numbers of the first page on which the related system is shown.
The part indicated is located somewhere in the system, not necessarily on the page indicated here.

[LOCATION] (1) : Inpane J/B (See page 20) (2) : R/B No. 1 (See page 25) (3) : R/B No. 2, J/B No. 2 (See page 26)
(4) : R/B No. 4 (See page 25) (5) : R/B No. 5 (See page 27) (6) R/B No. 6 (See page 27)

GROUND POINT

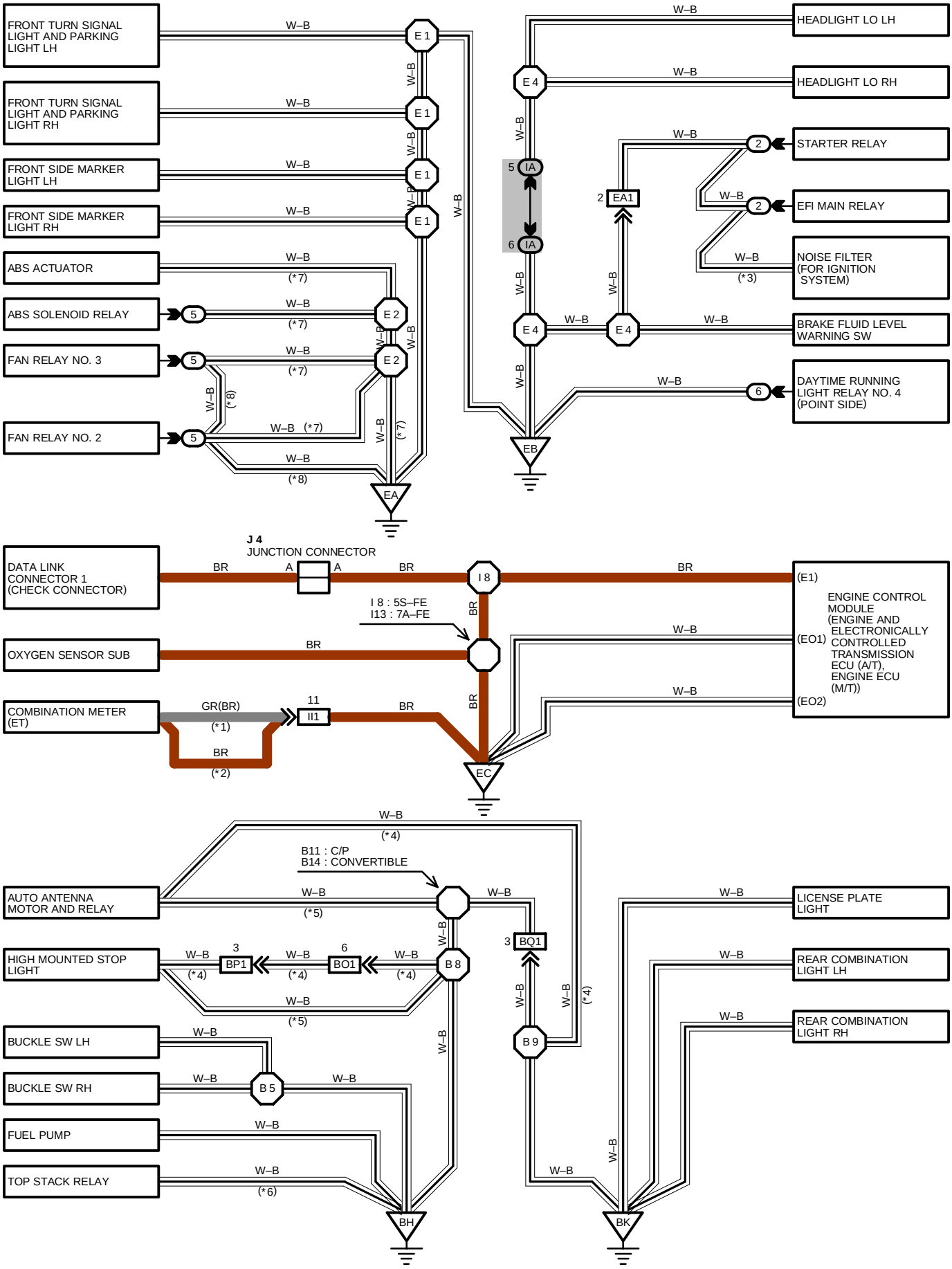

*1 : IN SOME CASES IN THE USA, THE WIRE COLOR INDICATED IN BRACKETS IS USED INSTEAD OF GR OR BR.
FOR THE INSTALLATION PROCEDURE OF THE GR OR BR WIRE SEE PAGE 15.

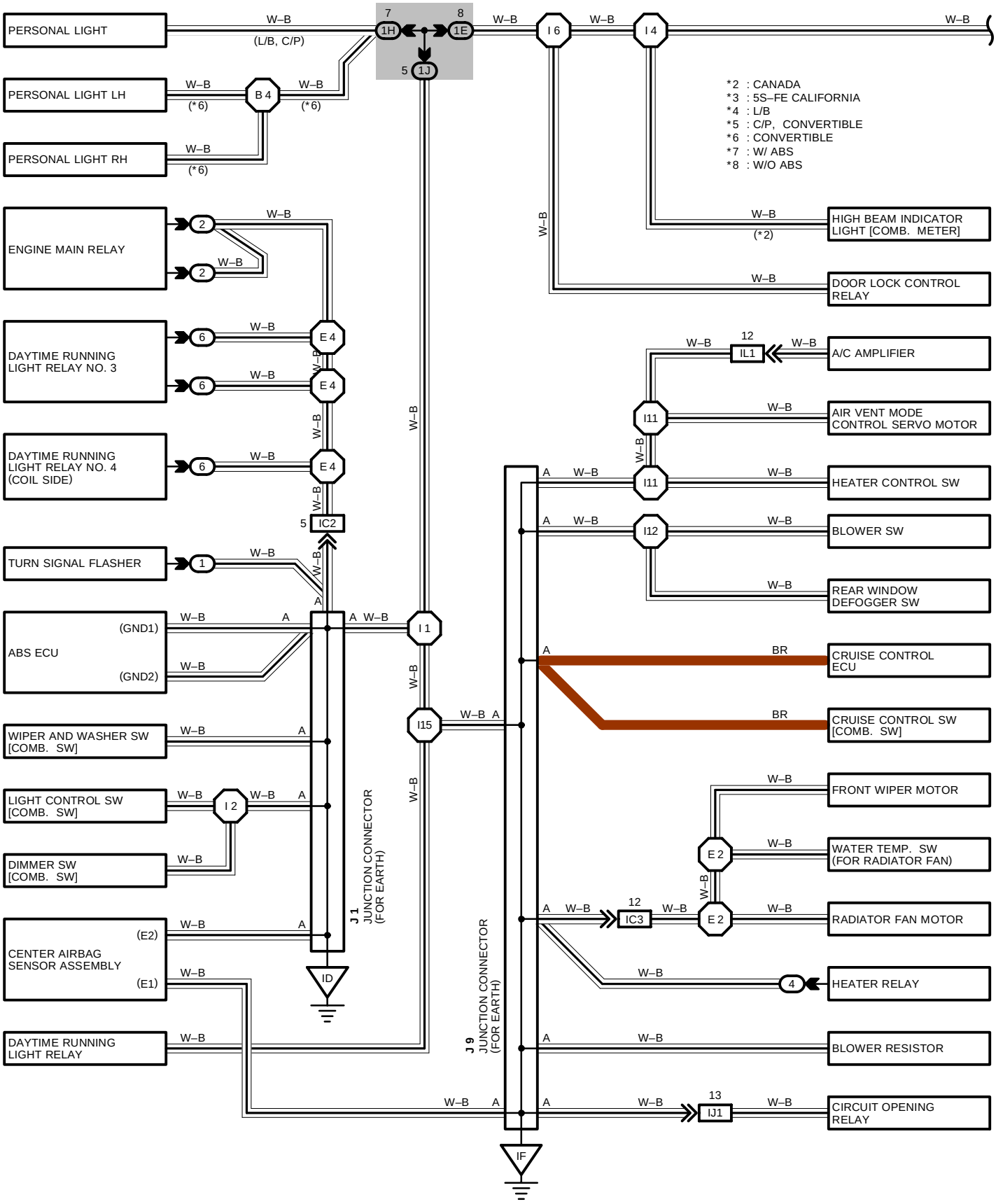

GROUND POINT

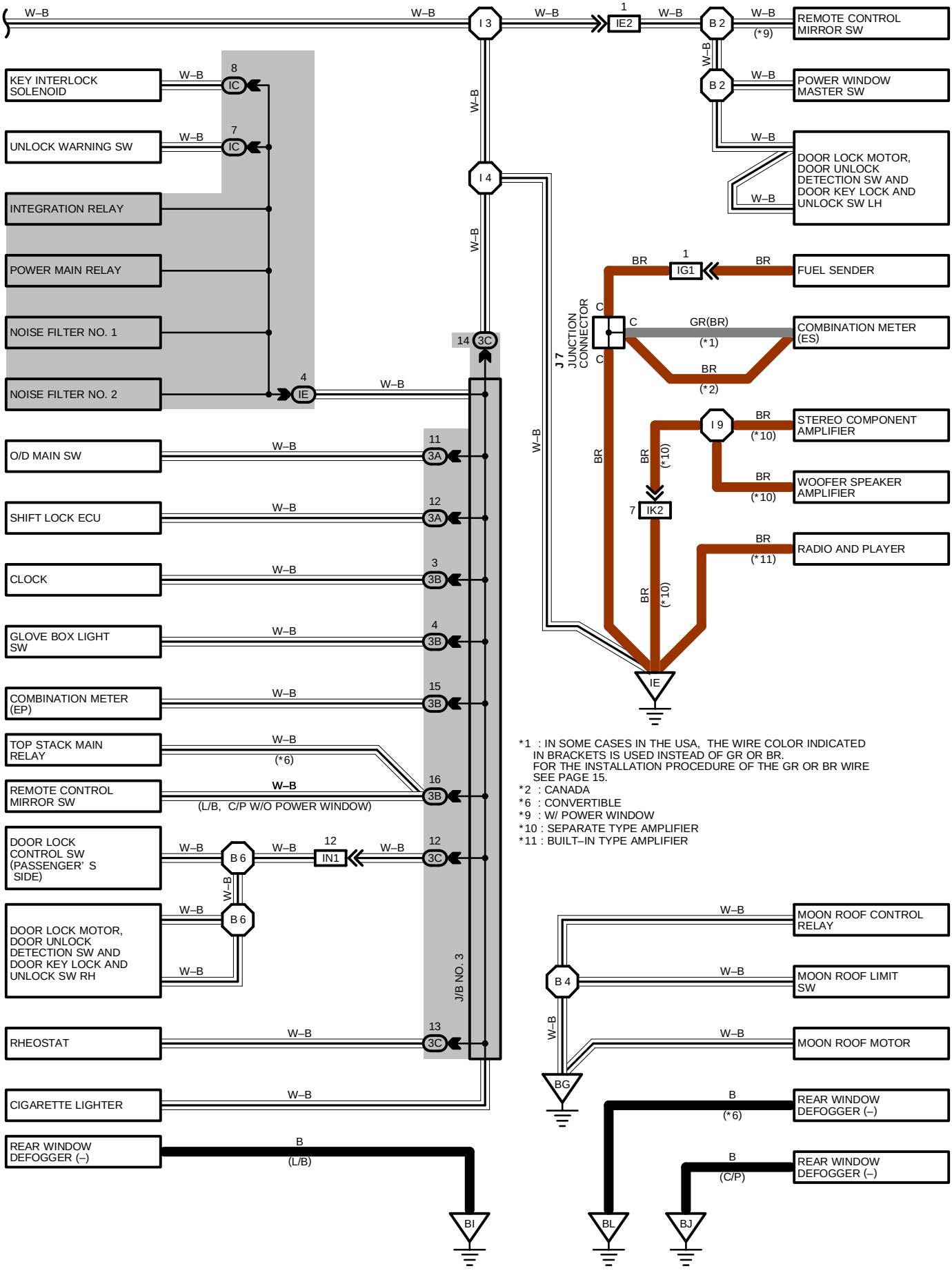

: PARTS LOCATION

CODE	SEE PAGE	CODE	SEE PAGE	CODE	SEE PAGE
J 1	33	**J 7**	33		
J 4	33	**J 9**	33		

: RELAY BLOCKS

CODE	SEE PAGE	RELAY BLOCKS (RELAY BLOCK LOCATION)
1	25	LEFT KICK PANEL
2	26	ENGINE COMPARTMENT LEFT
4	25	RIGHT KICK PANEL
5	27	ENGINE COMPARTMENT FRONT RIGHT
6	27	ENGINE COMPARTMENT FRONT LEFT

: JUNCTION BLOCK AND WIRE HARNESS CONNECTOR

CODE	SEE PAGE	JUNCTION BLOCK AND WIRE HARNESS (CONNECTOR LOCATION)
IA	20	ENGINE ROOM MAIN WIRE AND INPANE J/B (LEFT KICK PANEL)
IC	20	INSTRUMENT PANEL WIRE AND INPANE J/B (LEFT KICK PANEL)
IE		
1E	22	INSTRUMENT PANEL WIRE AND J/B NO. 1 (LEFT KICK PANEL)
1H	22	ROOF WIRE AND J/B NO. 1 (LEFT KICK PANEL)
1J	22	COWL WIRE AND J/B NO. 1 (LEFT KICK PANEL)
3A	24	INSTRUMENT PANEL WIRE AND J/B NO. 3 (BEHIND THE INSTRUMENT PANEL CENTER)
3B		
3C		

: CONNECTOR JOINING WIRE HARNESS AND WIRE HARNESS

CODE	SEE PAGE	JOINING WIRE HARNESS AND WIRE HARNESS (CONNECTOR LOCATION)
EA1	38 (5S–FE) 40 (7A–FE)	ENGINE WIRE AND ENGINE ROOM MAIN WIRE (INSIDE OF R/B NO. 2)
IC2	42	ENGINE ROOM MAIN WIRE AND COWL WIRE (LEFT KICK PANEL)
IC3	42	ENGINE ROOM MAIN WIRE AND COWL WIRE (INSIDE OF R/B NO. 4)
IE2	42	FRONT DOOR LH WIRE AND INSTRUMENT PANEL WIRE (LEFT KICK PANEL)
IG1	42	INSTRUMENT PANEL WIRE AND FLOOR WIRE (LEFT KICK PANEL)
II1	44	ENGINE WIRE AND INSTRUMENT PANEL WIRE (NEAR THE ENGINE CONTROL MODULE)
IJ1	44	ENGINE WIRE AND COWL WIRE (INSTRUMENT PANEL CENTER)
IK2	44	INSTRUMENT PANEL WIRE AND FLOOR NO. 3 WIRE (BEHIND THE RADIO AND PLAYER)
IL1	44	COWL WIRE AND A/C SUB WIRE (UPPER THE A/C UNIT)
IN1	44	FRONT DOOR RH WIRE AND INSTRUMENT PANEL WIRE (RIGHT KICK PANEL)
BO1	46 (L/B)	BACK DOOR NO. 1 WIRE AND FLOOR WIRE (BACK DOOR UPPER LEFT)
BP1	46 (L/B)	BACK DOOR NO. 2 WIRE AND BACK DOOR NO.1 WIRE (BACK DOOR UPPER LEFT)
BQ1	46 (L/B) 48 (C/P) 50 (CONVERTIBLE)	FLOOR WIRE AND LUGGAGE ROOM WIRE (LUGGAGE ROOM LEFT)

: GROUND POINTS

CODE	SEE PAGE	GROUND POINTS LOCATION
EA	38 (5S–FE) 40 (7A–FE)	FRONT SIDE OF RIGHT FENDER
EB	38 (5S–FE) 40 (7A–FE)	FRONT SIDE OF LEFT FENDER
EC	38 (5S–FE) 40 (7A–FE)	INTAKE MANIFOLD
ID	42	LEFT KICK PANEL
IE	42	INSTRUMENT PANEL BRACE LH
IF	42	R/B NO.4 SET BOLT
BG	46 (L/B) 48 (C/P)	ROOF LEFT
BH	46 (L/B) 48 (C/P) 50 (CONVERTIBLE)	UNDER THE LEFT CENTER PILLAR
BI	46 (L/B)	BACK DOOR RIGHT
BJ	48 (C/P)	RIGHT REAR PILLAR
BK	46 (L/B) 48 (C/P) 50 (CONVERTIBLE)	BACK DOOR CENTER
BL	50 (CONVERTIBLE)	ROOM PATITION PANEL

GROUND POINT

: SPLICE POINTS

CODE	SEE PAGE	WIRE HARNESS WITH SPLICE POINTS	CODE	SEE PAGE	WIRE HARNESS WITH SPLICE POINTS
E 1	38 (5S–FE)	ENGINE ROOM MAIN WIRE	B 2	46 (L/B)	FRONT DOOR LH WIRE
	40 (7A–FE)			48 (C/P)	
E 2	38 (5S–FE)			50 (CONVERTIBLE)	
	40 (7A–FE)		B 4	46 (L/B)	ROOF WIRE
E 4	38 (5S–FE)			48 (C/P)	
	40 (7A–FE)			50 (CONVERTIBLE)	
I 1	44	COWL WIRE	B 5	46 (L/B)	FLOOR WIRE
I 2				48 (C/P)	
I 3	44	INSTRUMENT PANEL WIRE		50 (CONVERTIBLE)	
I 4			B 6	46 (L/B)	FRONT DOOR RH WIRE
I 6				48 (C/P)	
I 8	44	ENGINE WIRE		50 (CONVERTIBLE)	
I 9	44	FLOOR NO. 3 WIRE	B 8	46 (L/B)	FLOOR WIRE
I11	44	COWL WIRE		48 (C/P)	
I12			B 9	46 (L/B)	LUGGAGE ROOM WIRE
I13	44	ENGINE WIRE	B11	48 (C/P)	FLOOR WIRE
I15	44	COWL WIRE	B14	50 (CONVERTIBLE)	

J 1

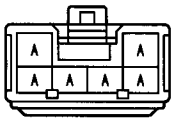

(HINT:SEE PAGE 7)

J 4

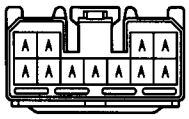

(HINT:SEE PAGE 7)

J 7

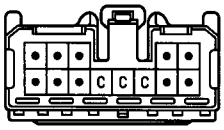

(HINT:SEE PAGE 7)

J 9

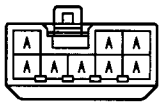

(HINT:SEE PAGE 7)

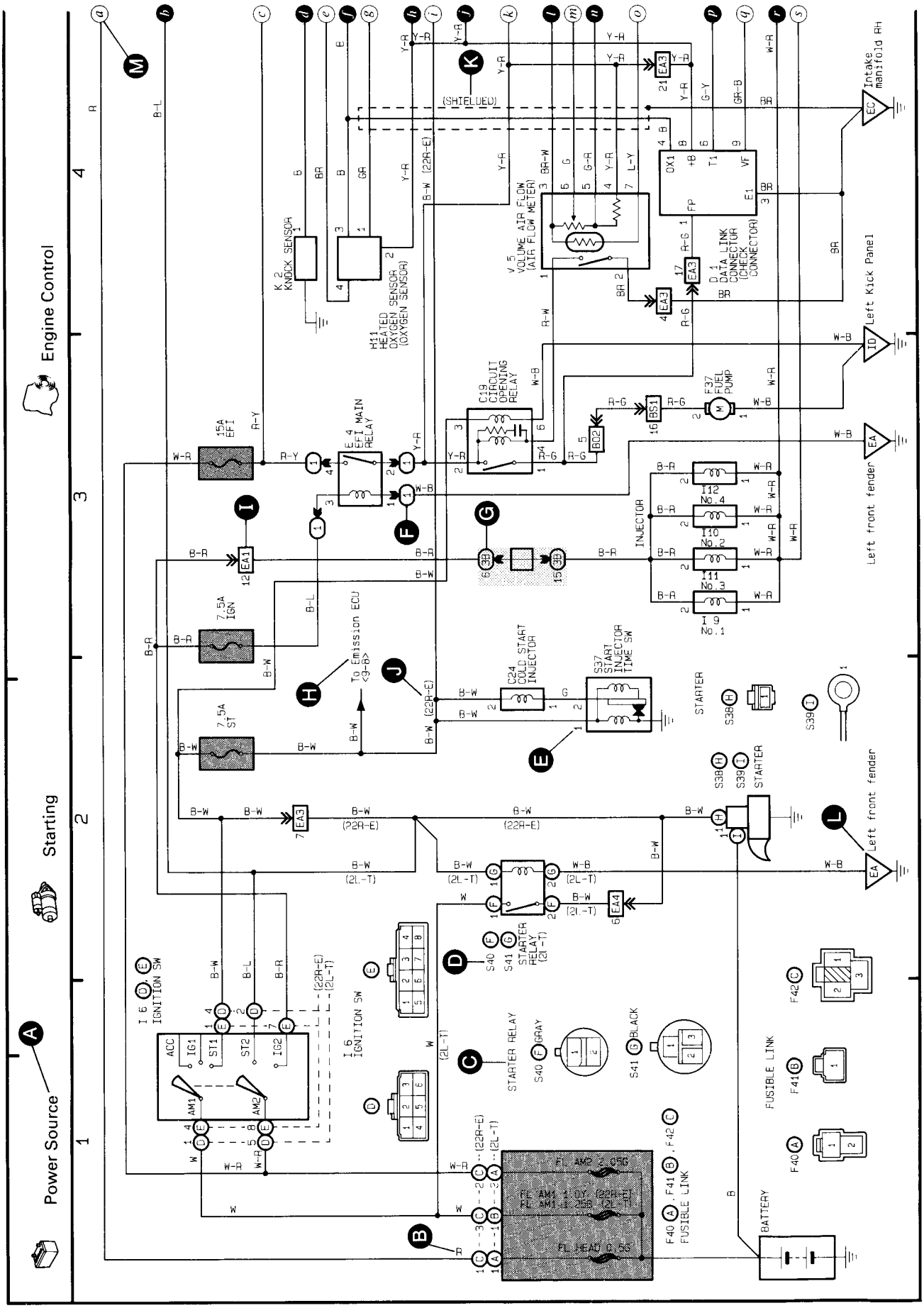
* The system shown here is an EXAMPLE ONLY. It is different to the actual circuit shown in the wiring diagram section.
HOW TO USE THIS MANUAL
Power Source
Starting
Engine Control
Left front fender
Left Kick Panel
Intake manifold RH
BATTERY
STARTER
STARTER RELAY
FUSIBLE LINK
DATA LINK CONNECTOR (CHECK CONNECTOR)
VOLUME AIR FLOW (AIR FLOW METER)
HEATED OXYGEN SENSOR (OXYGEN SENSOR)
KNOCK SENSOR
EFI MAIN RELAY
CIRCUIT OPENING RELAY
FUEL PUMP
COLD START INJECTOR
START INJECTOR TIME SW
IGNITION SW
INJECTOR
To Emission ECU

Ⓐ: System Title

Ⓑ: Indicates the wiring color.

Wire colors are indicated by an alphabetical code.

B	= Black	L	= Blue	R	= Red
BR	= Brown	LG	= Light Green	V	= Violet
G	= Green	O	= Orange	W	= White
GR	= Gray	P	= Pink	Y	= Yellow

The first letter indicates the basic wire color and the second letter indicates the color of the stripe.

Example: L – Y

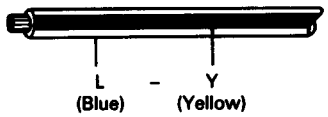

Ⓒ: Indicates the connector to be connected to a part (the numeral indicates the pin No.)

Ⓓ: The position of the parts is the same as shown in the wiring diagram and wire routing.

Ⓔ: Indicates the pin number of the connector. The numbering system is different for female and male connectors.

Example: **Numbered in order from upper left to lower right** **Numbered in order from upper right to lower left**

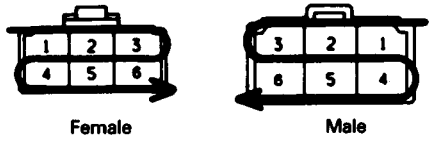

The numbering system for the overall wiring diagram is the same as above.

Ⓕ: Indicates a Relay Block. No Shading is used and only the Relay Block No. is shown to distinguish it from the J/B.

Example: ① Indicates Relay Block No. 1.

Ⓖ: Junction Block (The number in the circle is the J/B No. and connector code is shown beside it). Junction Blocks are shaded to clearly separate them from other parts (different junction blocks are shaded differently for further clarification.).

Example:

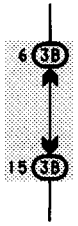

3B indicates that it is inside Junction Block No. 3.

Ⓗ: Indicates related system.

Ⓘ: Indicates the wiring harness and wiring harness connector. The wiring harness with male terminal is shown with arrows **(≫)**.

Outside numerals are pin numbers.

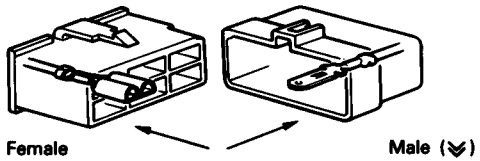

Ⓙ: ( ) is used to indicate different wiring and connector, etc. when the vehicle model, engine type, or specification is different.

Ⓚ: Indicates a shielded cable.



Ⓛ: Indicates and located on ground point.

Ⓜ: The same code occuring on the next page indicates that the wire harness is continuous.

SYSTEM INDEX

SYSTEMS	LOCATION
ABS (Anti–Lock Brake System	17–2
Air Conditioning	26–3
Auto Antenna	22–4
Back–Up Light	10–2
Charging	1–3
Cigarette Lighter	15–3
Clock	15–4
Combination Meter	23–2
Cruise Control	16–2
Door Lock Control	14–2
Electric Tension Reducer	24–4
Electronically Controlled Transmission	20–2
Engine Control	2–2 (5S–FE) 3–2 (7A–FE)
Front Wiper and Washer	11–2
Headlight	4–2 (USA) 5–2 (Canada)
Horn	8–2
Ignition	1–4
Illumination	7–2
Interior Light	6–2
Light Auto Turn Off	4–4
Moon Roof	15–2
Power Source	1~26–1
Power Window	13–2
Radiator Fan and Condenser Fan	25–2
Radio and Player	21–2 (Separate Type Amplifier) 22–2 (Built–In–Type Amplifier)
Rear Window Defogger	19–3
Rear Wiper and Washer	11–3
Remote Control Mirror	12–2
Shift Lock	9–2
SRS (Supplemental Restraint System)	18–2
Starting	1–2
Stop Light	10–3
Taillight	8–2
Top Stack	24–2
Turn Signal and Hazard Warning Light	9–3
Unlock and Seat Belt Warning	19–2

1 CELICA ELECTRICAL WIRING DIAGRAM

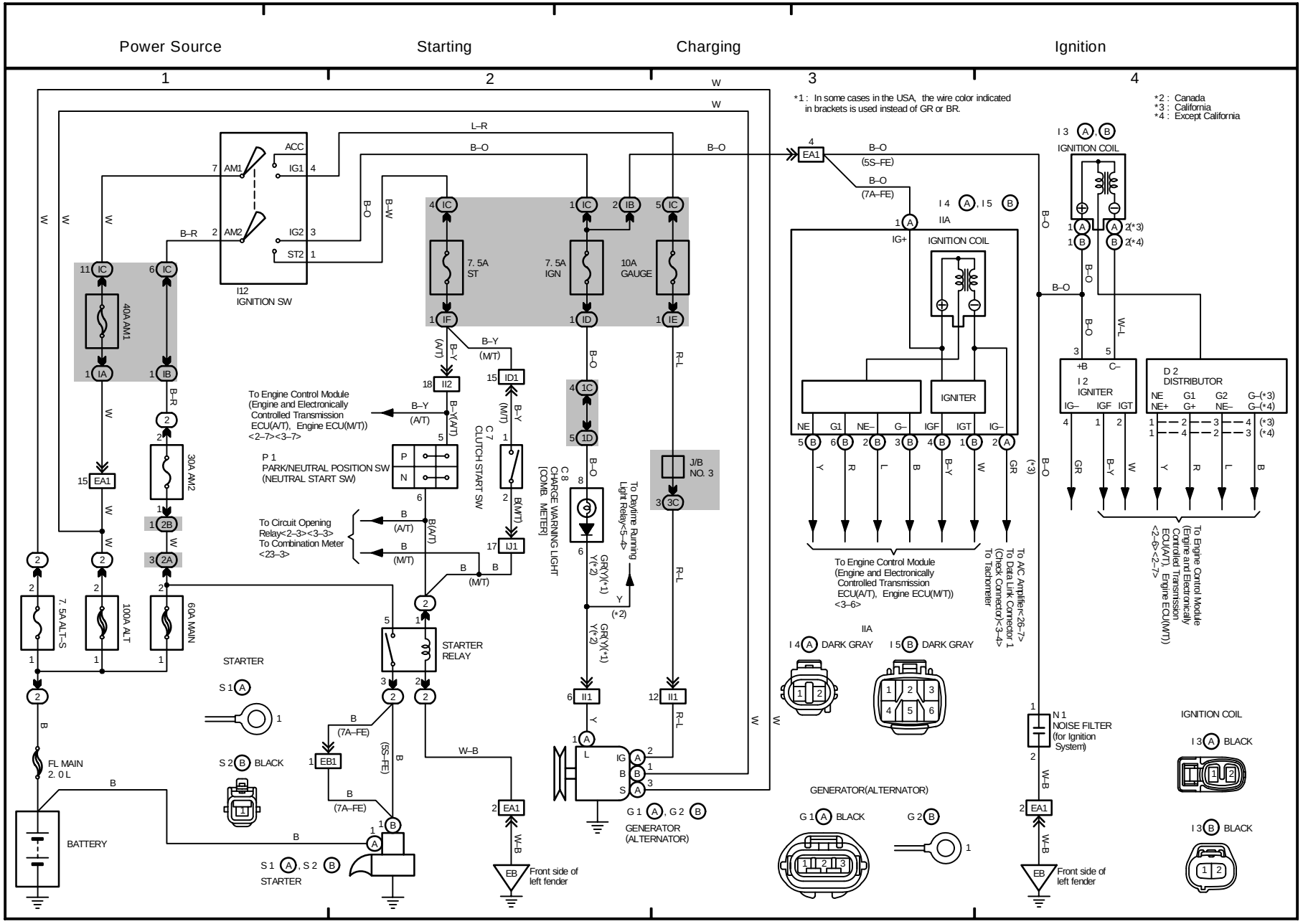

OVERALL ELECTRICAL WIRING DIAGRAM

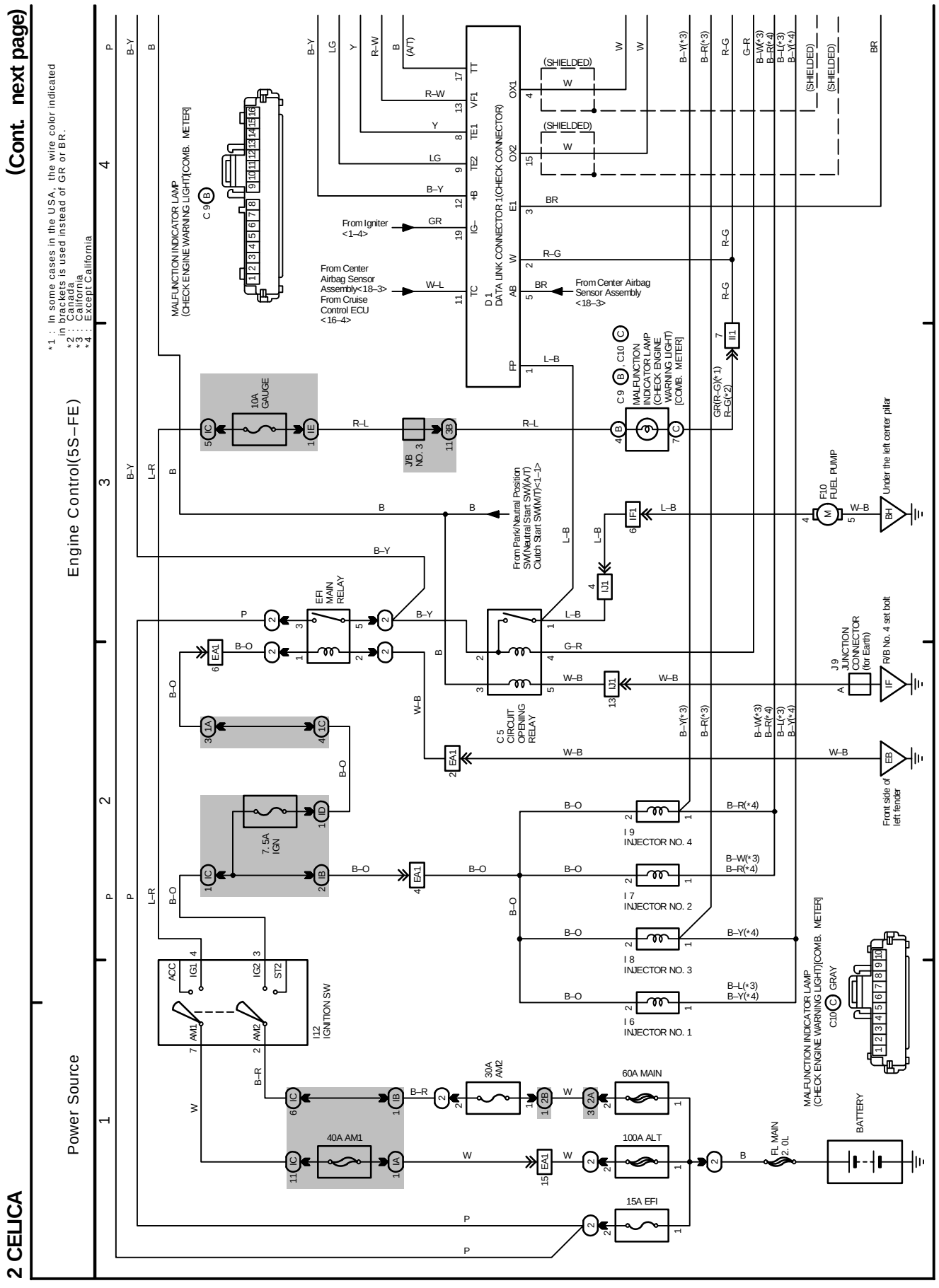

2 CELICA (Cont'd)

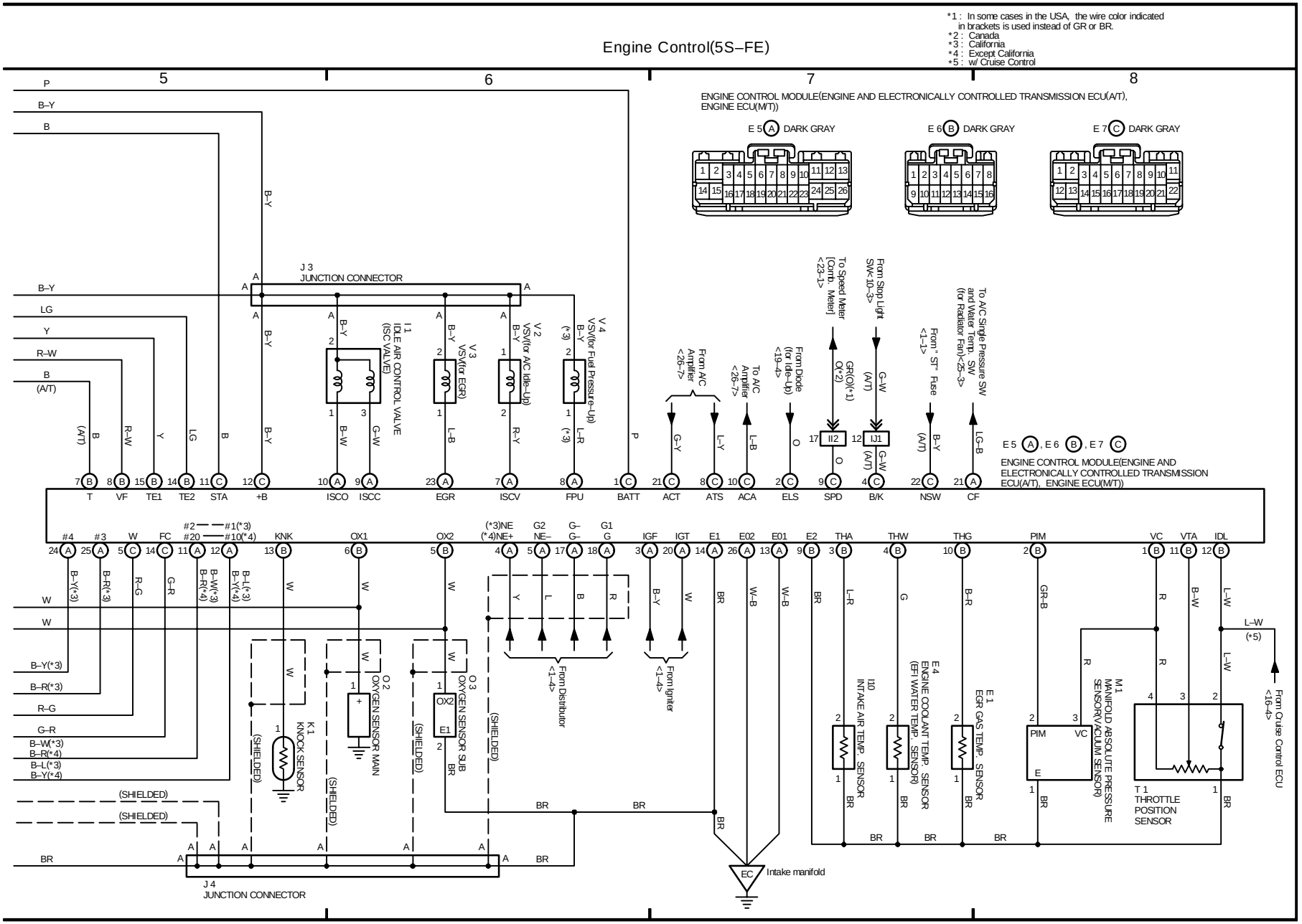

OVERALL ELECTRICAL WIRING DIAGRAM

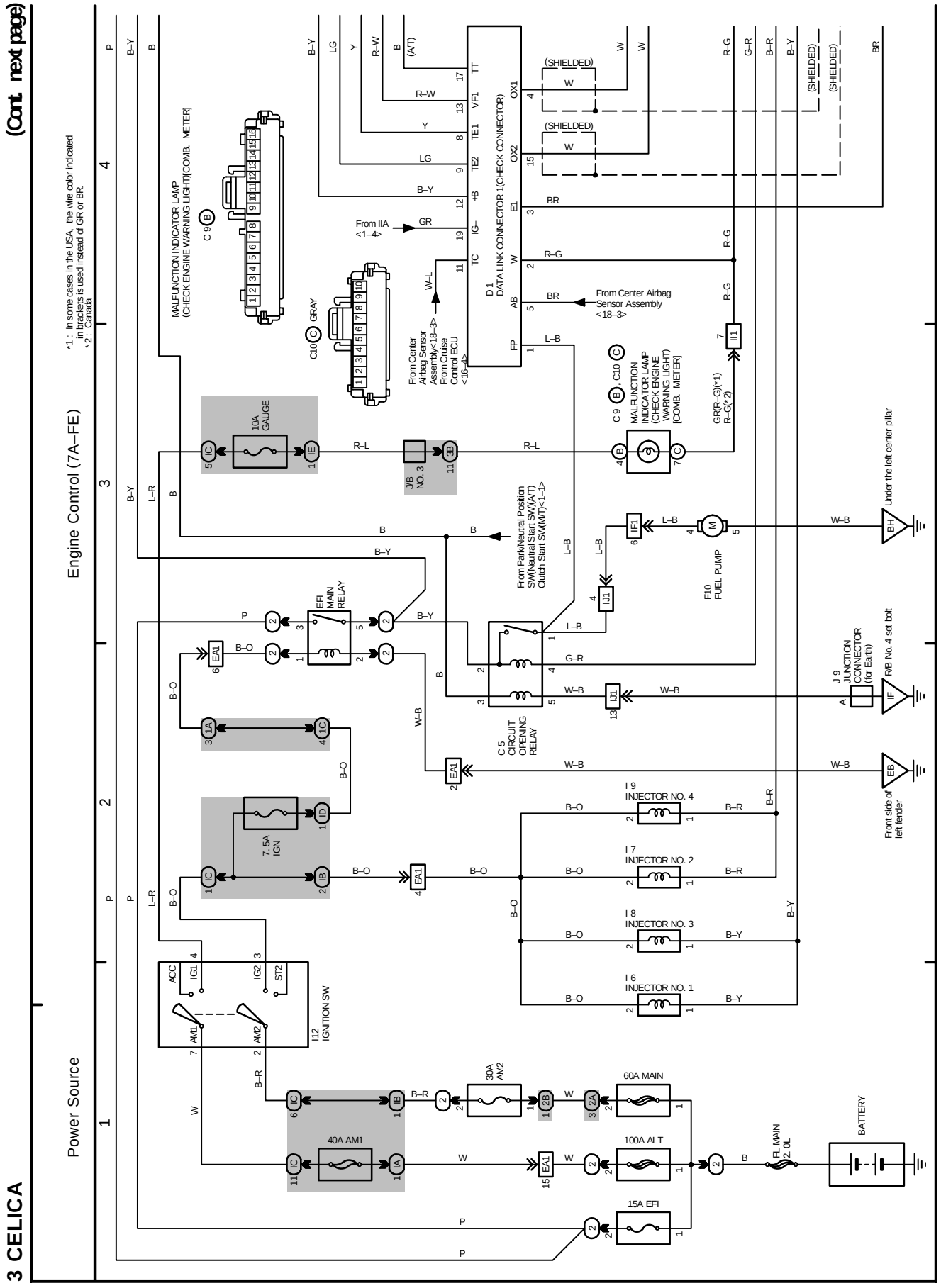

3 CELICA (Cont'd)

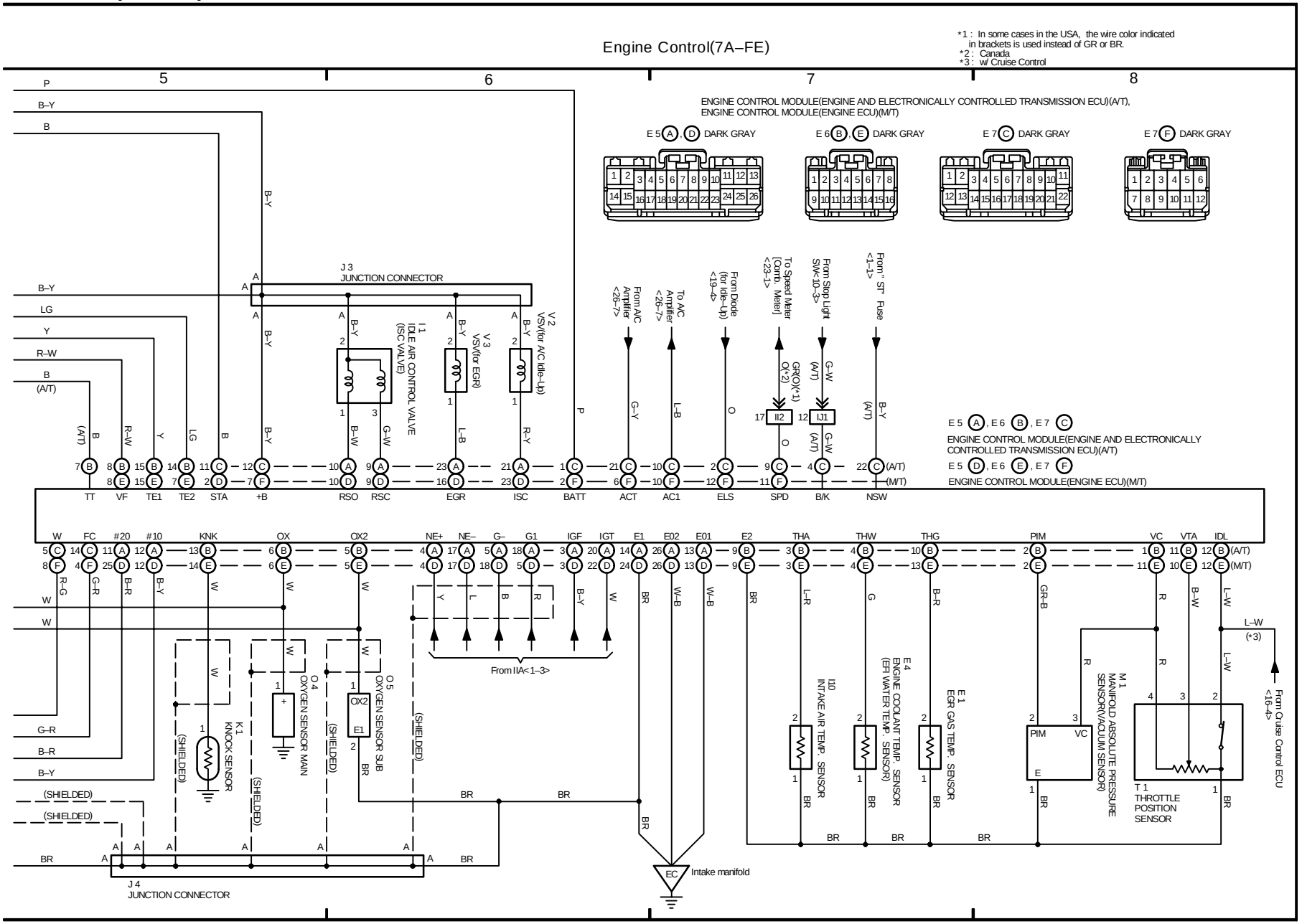

OVERALL ELECTRICAL WIRING DIAGRAM

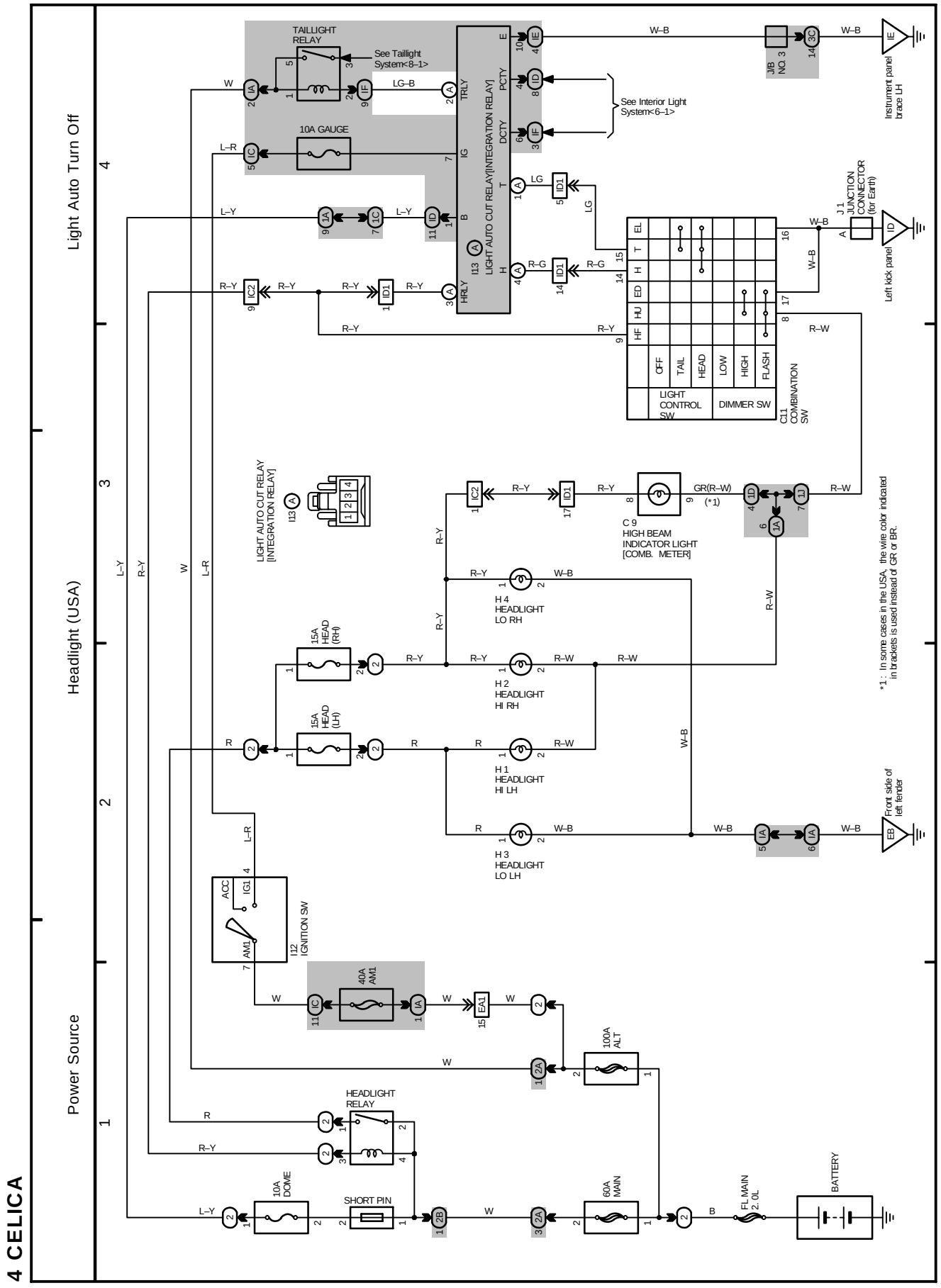

5 CELICA

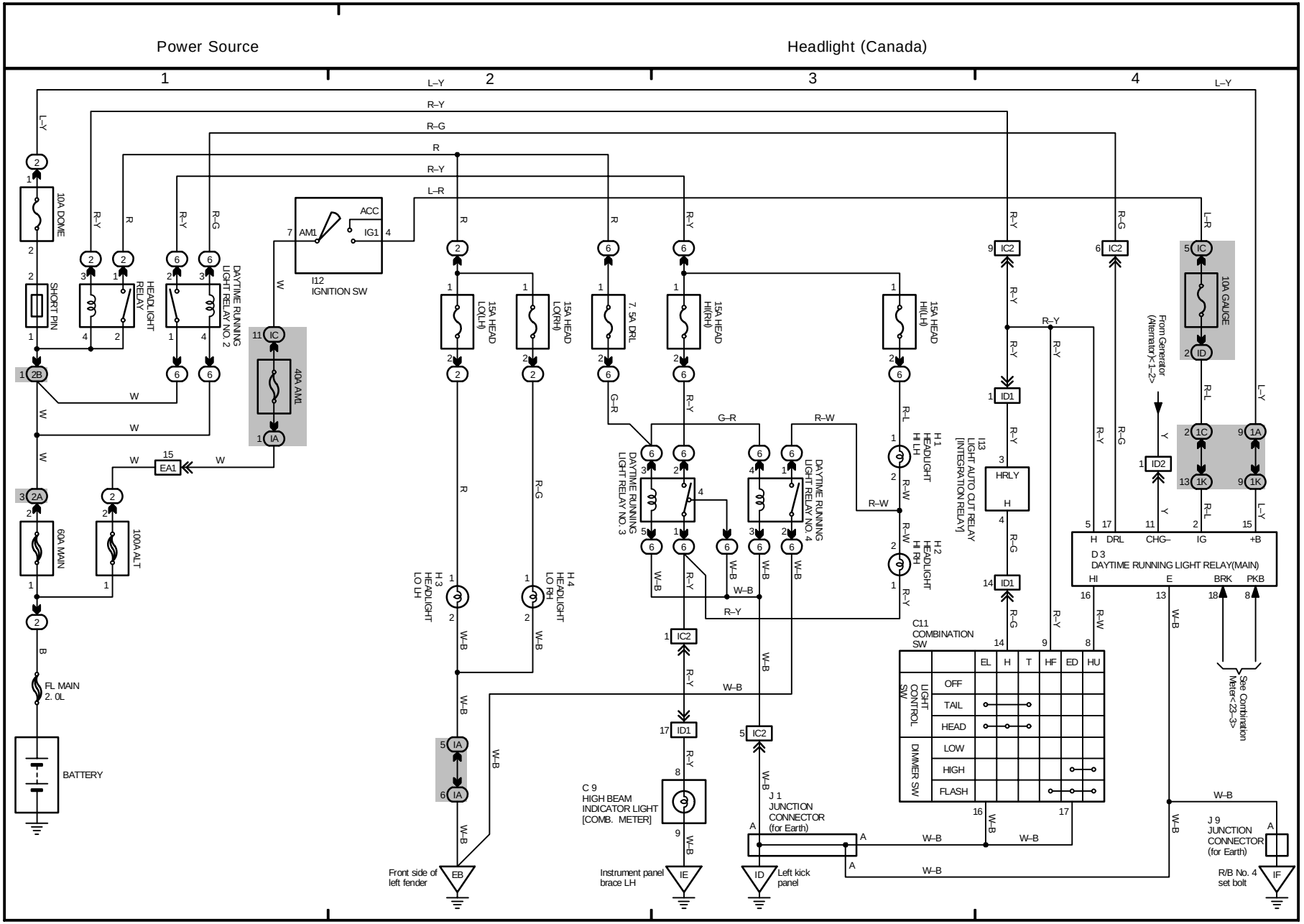
Power Source
Headlight (Canada)
1
2
3
4
10A DOME
SHORT PIN
HEADLIGHT RELAY
DAYTIME RUNNING LIGHT RELAY NO. 2
40A AM1
60A MAIN
100A ALT
FL MAIN 2. 0L
BATTERY
I12 IGNITION SW
ACC
IG1
AM1
15A HEAD LO(LH)
15A HEAD LO(RH)
7. 5A DRL
15A HEAD HI(RH)
15A HEAD HI(LH)
DAYTIME RUNNING LIGHT RELAY NO. 3
DAYTIME RUNNING LIGHT RELAY NO. 4
H1 HEADLIGHT HI LH
H2 HEADLIGHT HI RH
H3 HEADLIGHT LO LH
H4 HEADLIGHT LO RH
I13 LIGHT AUTO CUT RELAY [INTEGRATION RELAY]
HRLY
C11 COMBINATION SW
LIGHT CONTROL SW
DIMMER SW
OFF
TAIL
HEAD
LOW
HIGH
FLASH
EL
H
T
HF
ED
HU
D 3 DAYTIME RUNNING LIGHT RELAY(MAIN)
HI
E
BRK
PKB
DRL
CHG–
IG
+B
10A GAUGE
From Generator (Alternator)<1-2>
See Combination Meter<23-3>
C 9 HIGH BEAM INDICATOR LIGHT [COMB. METER]
J 1 JUNCTION CONNECTOR (for Earth)
J 9 JUNCTION CONNECTOR (for Earth)
Front side of left fender
Instrument panel brace LH
Left kick panel
R/B No. 4 set bolt
L–Y
R–Y
R–G
R
L–R
W
G–R
R–W
W–B
R–L
Y

OVERALL ELECTRICAL WIRING DIAGRAM

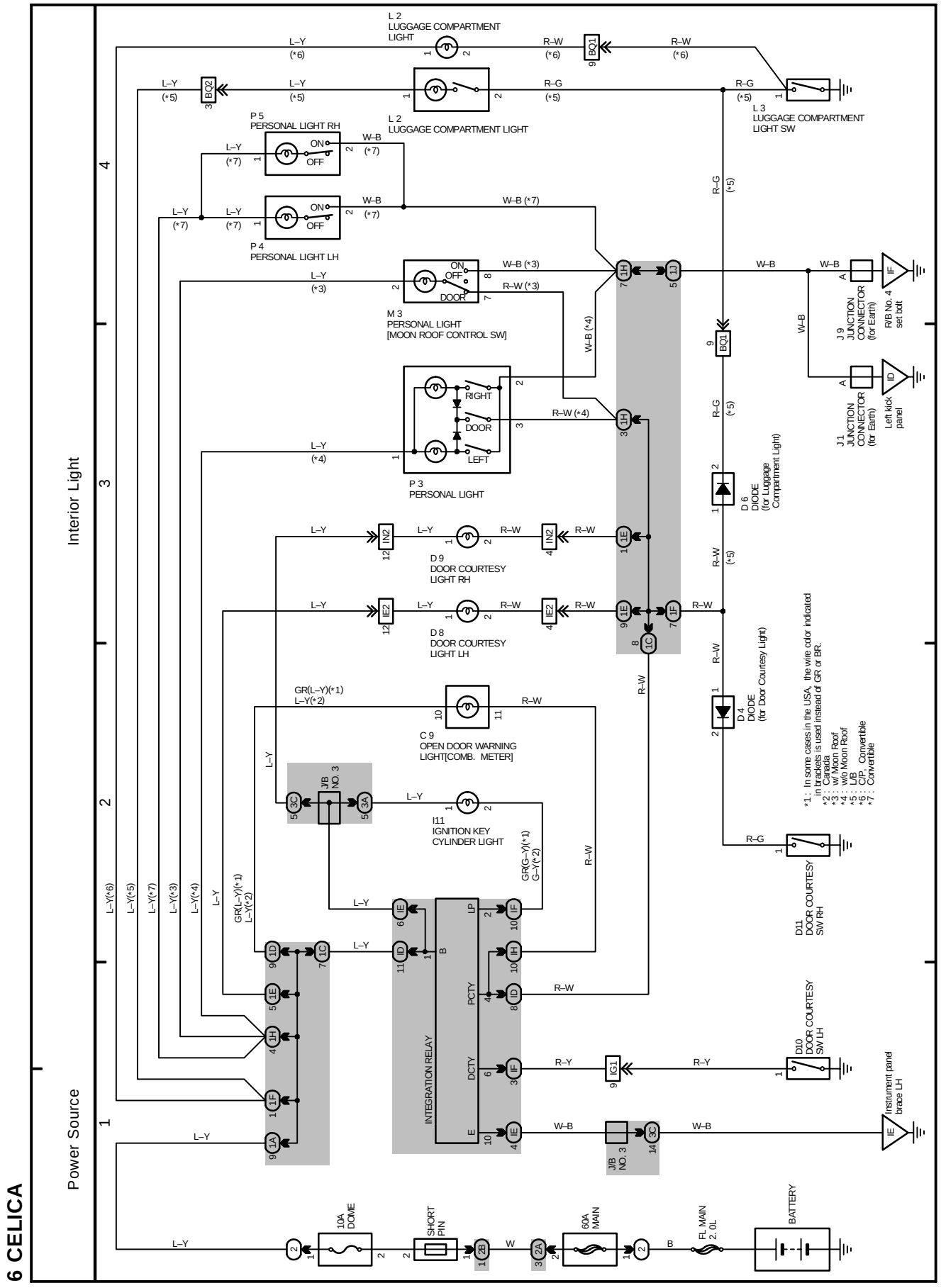

7 CELICA

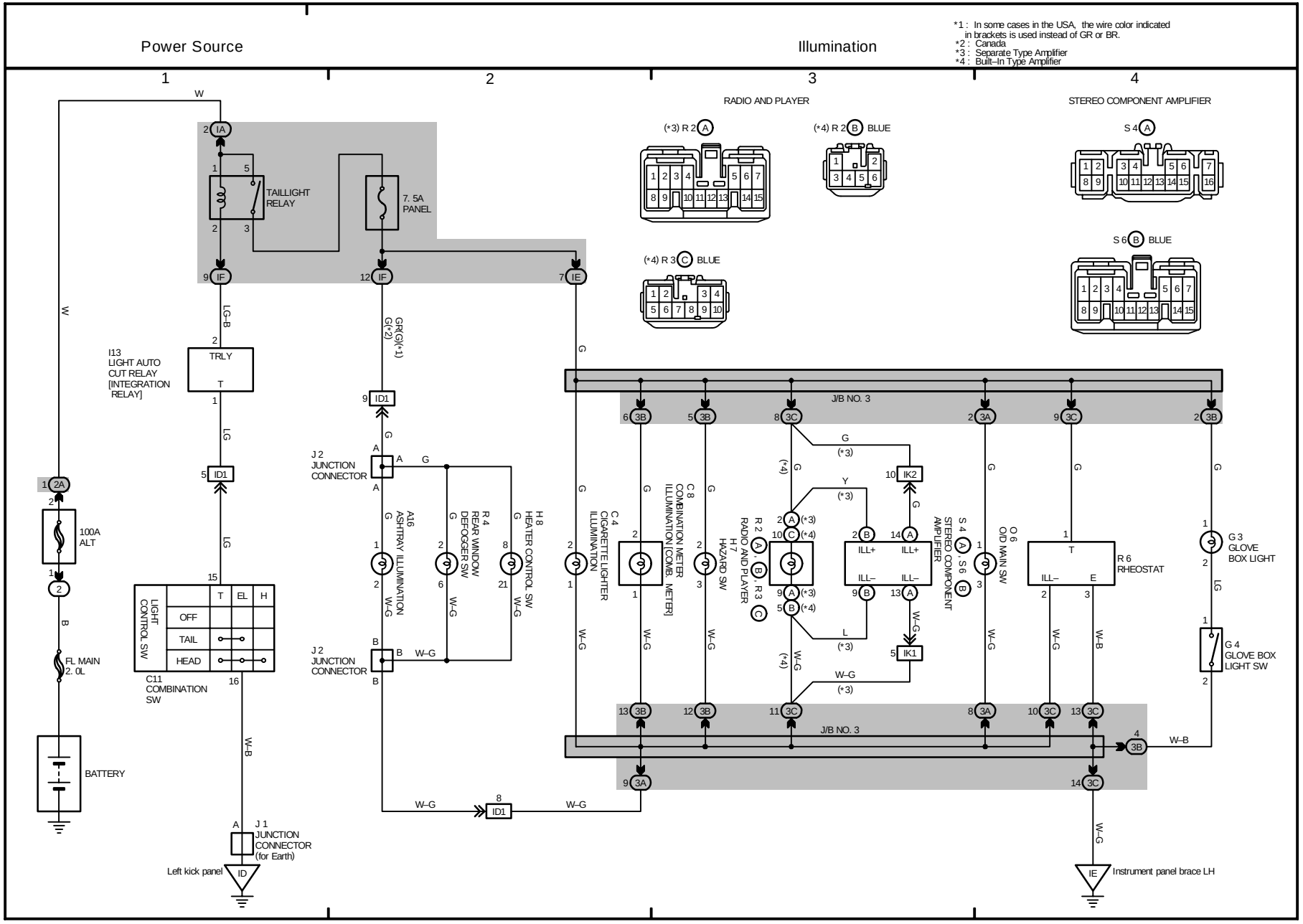
Power Source
Illumination
*1 : In some cases in the USA, the wire color indicated in brackets is used instead of GR or BR.
*2 : Canada
*3 : Separate Type Amplifier
*4 : Built–In Type Amplifier
1
2
3
4
RADIO AND PLAYER
STEREO COMPONENT AMPLIFIER
(*3) R 2 A
(*4) R 2 B BLUE
(*4) R 3 C BLUE
S 4 A
S 6 B BLUE
TAILLIGHT RELAY
7. 5A PANEL
I13 LIGHT AUTO CUT RELAY [INTEGRATION RELAY]
TRLY
100A ALT
FL MAIN 2. 0L
BATTERY
LIGHT CONTROL SW
OFF
TAIL
HEAD
C11 COMBINATION SW
J 2 JUNCTION CONNECTOR
J 1 JUNCTION CONNECTOR (for Earth)
Left kick panel
ID
A16 ASHTRAY ILLUMINATION
R 4 REAR WINDOW DEFOGGER SW
H 8 HEATER CONTROL SW
C 4 CIGARETTE LIGHTER ILLUMINATION
C 8 COMBINATION METER ILLUMINATION [COMB. METER]
H 7 HAZARD SW
R 2 , R 3 RADIO AND PLAYER
S 4 , S 6 STEREO COMPONENT AMPLIFIER
O 6 O/D MAIN SW
R 6 RHEOSTAT
G 3 GLOVE BOX LIGHT
G 4 GLOVE BOX LIGHT SW
J/B NO. 3
Instrument panel brace LH
IE

OVERALL ELECTRICAL WIRING DIAGRAM

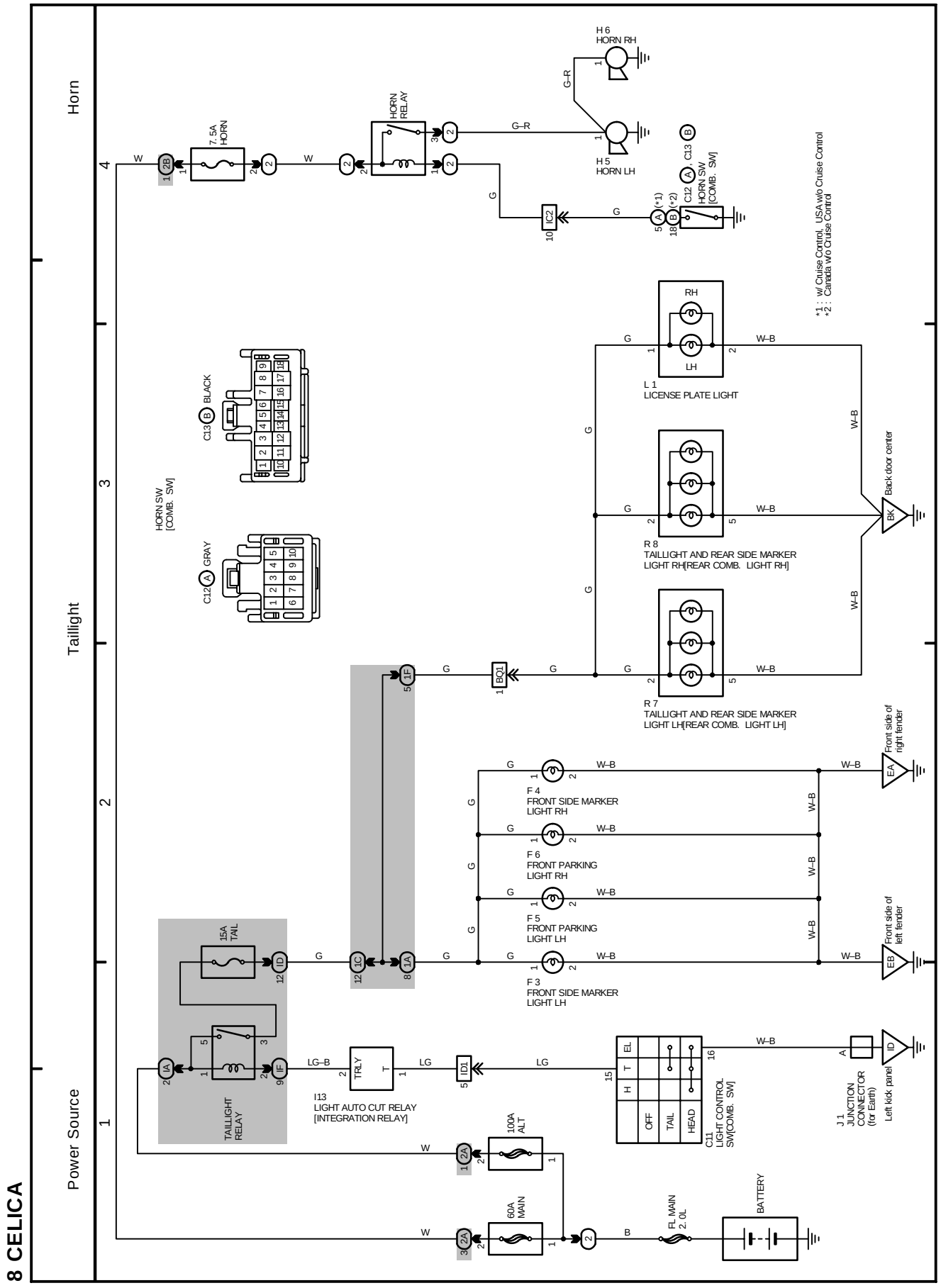

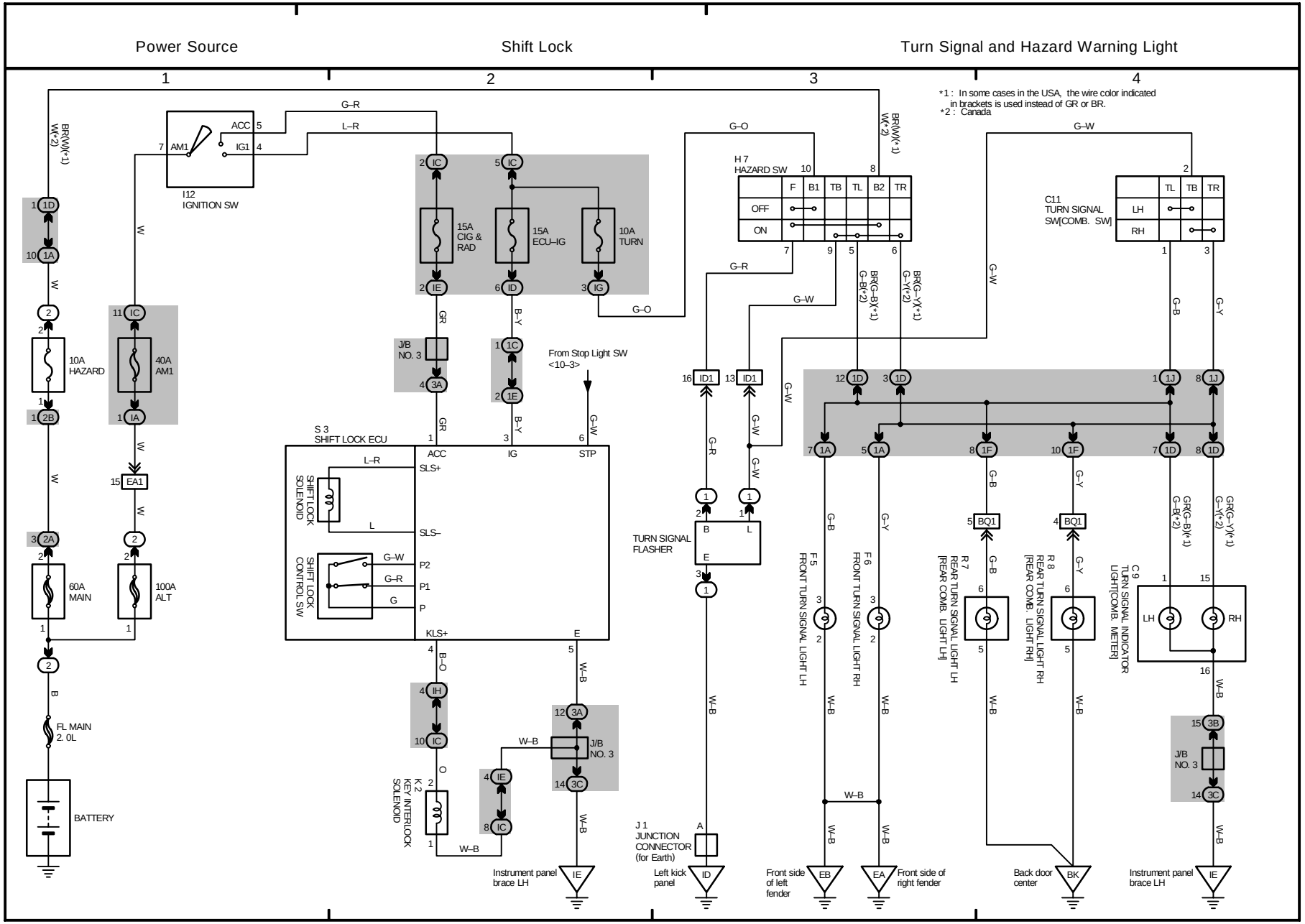
Power Source
Shift Lock
Turn Signal and Hazard Warning Light
1
2
3
4
*1 : In some cases in the USA, the wire color indicated in brackets is used instead of GR or BR.
*2 : Canada
I12 IGNITION SW
ACC
IG1
AM1
15A CIG & RAD
15A ECU–IG
10A TURN
10A HAZARD
40A AM1
60A MAIN
100A ALT
FL MAIN 2. 0L
BATTERY
J/B NO. 3
S 3 SHIFT LOCK ECU
SHIFT LOCK SOLENOID
SHIFT LOCK CONTROL SW
K 2 KEY INTERLOCK SOLENOID
From Stop Light SW <10–3>
H 7 HAZARD SW
OFF
ON
TURN SIGNAL FLASHER
J 1 JUNCTION CONNECTOR (for Earth)
Left kick panel
Instrument panel brace LH
C11 TURN SIGNAL SW[COMB. SW]
F 5 FRONT TURN SIGNAL LIGHT LH
F 6 FRONT TURN SIGNAL LIGHT RH
Front side of left fender
Front side of right fender
R 7 REAR TURN SIGNAL LIGHT LH [REAR COMB. LIGHT LH]
R 8 REAR TURN SIGNAL LIGHT RH [REAR COMB. LIGHT RH]
Back door center
C 9 TURN SIGNAL INDICATOR LIGHT[COMB. METER]
LH
RH

OVERALL ELECTRICAL WIRING DIAGRAM

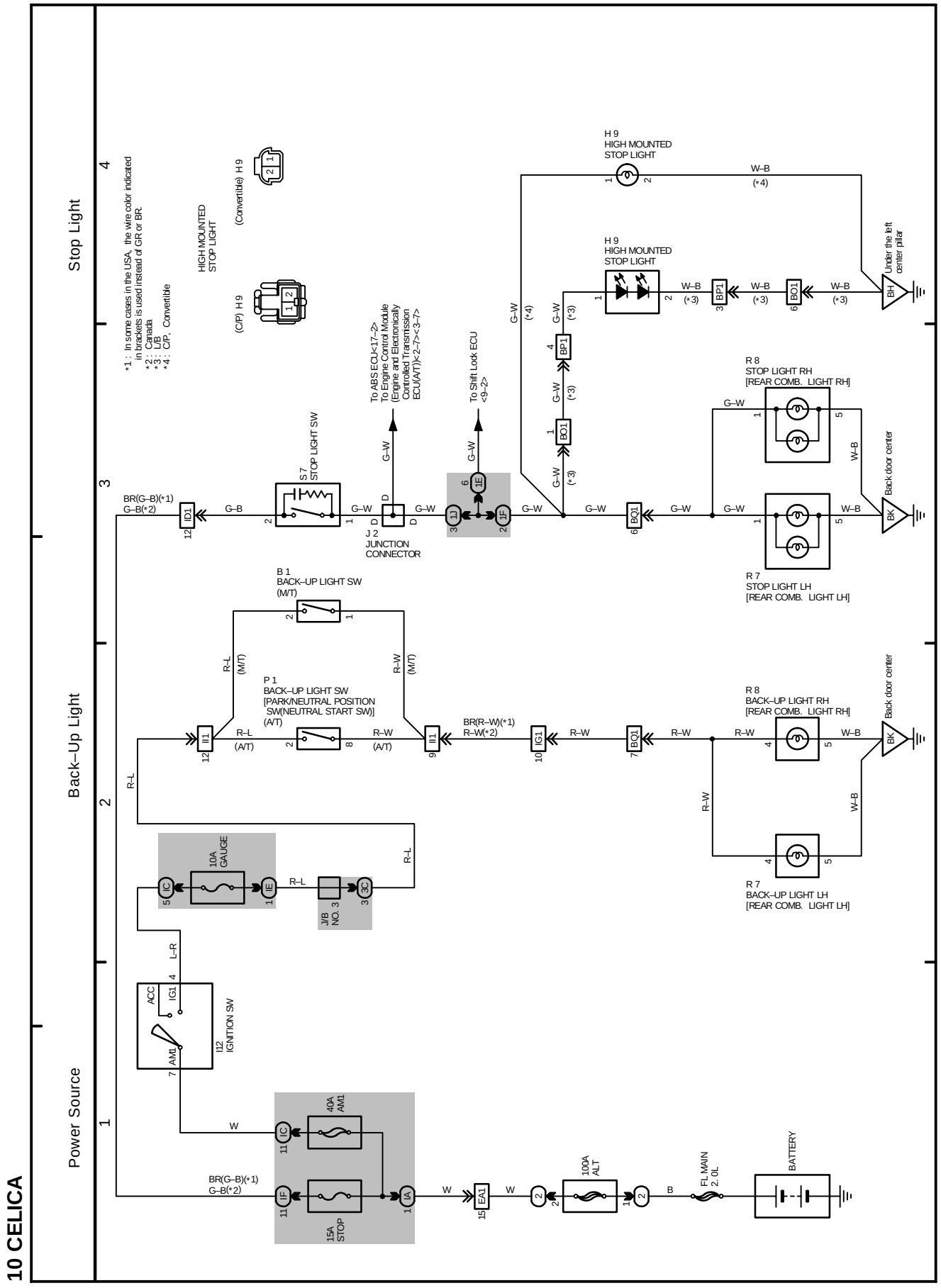

11 CELICA

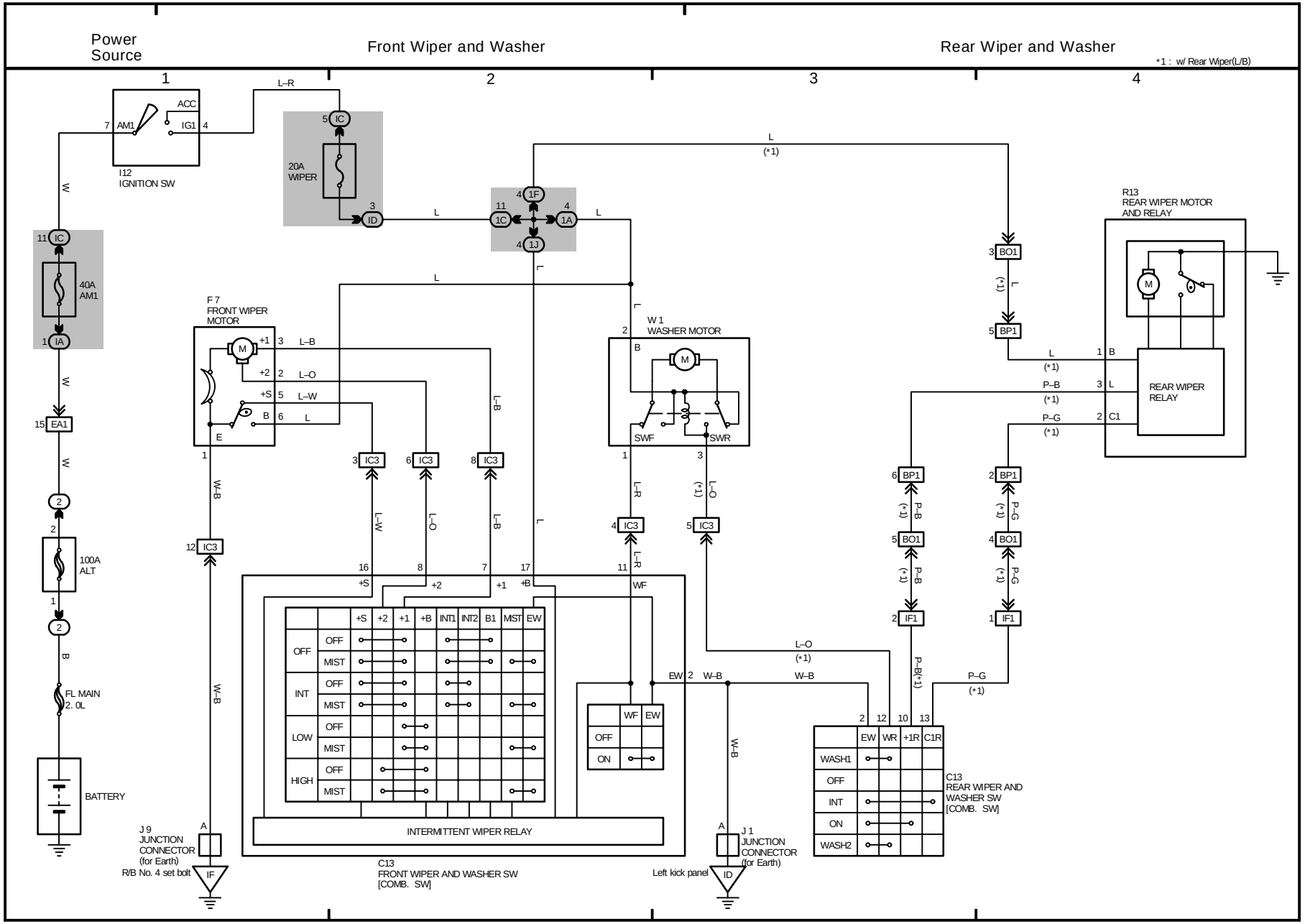
Power Source
Front Wiper and Washer
Rear Wiper and Washer
*1 : w/ Rear Wiper(L/B)
1
2
3
4
I12 IGNITION SW
ACC
AM1
IG1
20A WIPER
40A AM1
100A ALT
FL MAIN 2. 0L
BATTERY
F 7 FRONT WIPER MOTOR
W 1 WASHER MOTOR
R13 REAR WIPER MOTOR AND RELAY
REAR WIPER RELAY
INTERMITTENT WIPER RELAY
C13 FRONT WIPER AND WASHER SW [COMB. SW]
C13 REAR WIPER AND WASHER SW [COMB. SW]
J 9 JUNCTION CONNECTOR (for Earth)
R/B No. 4 set bolt
J 1 JUNCTION CONNECTOR (for Earth)
Left kick panel
OFF
MIST
INT
LOW
HIGH
ON
WASH1
WASH2
WR
+1R
C1R
WF
EW

OVERALL ELECTRICAL WIRING DIAGRAM

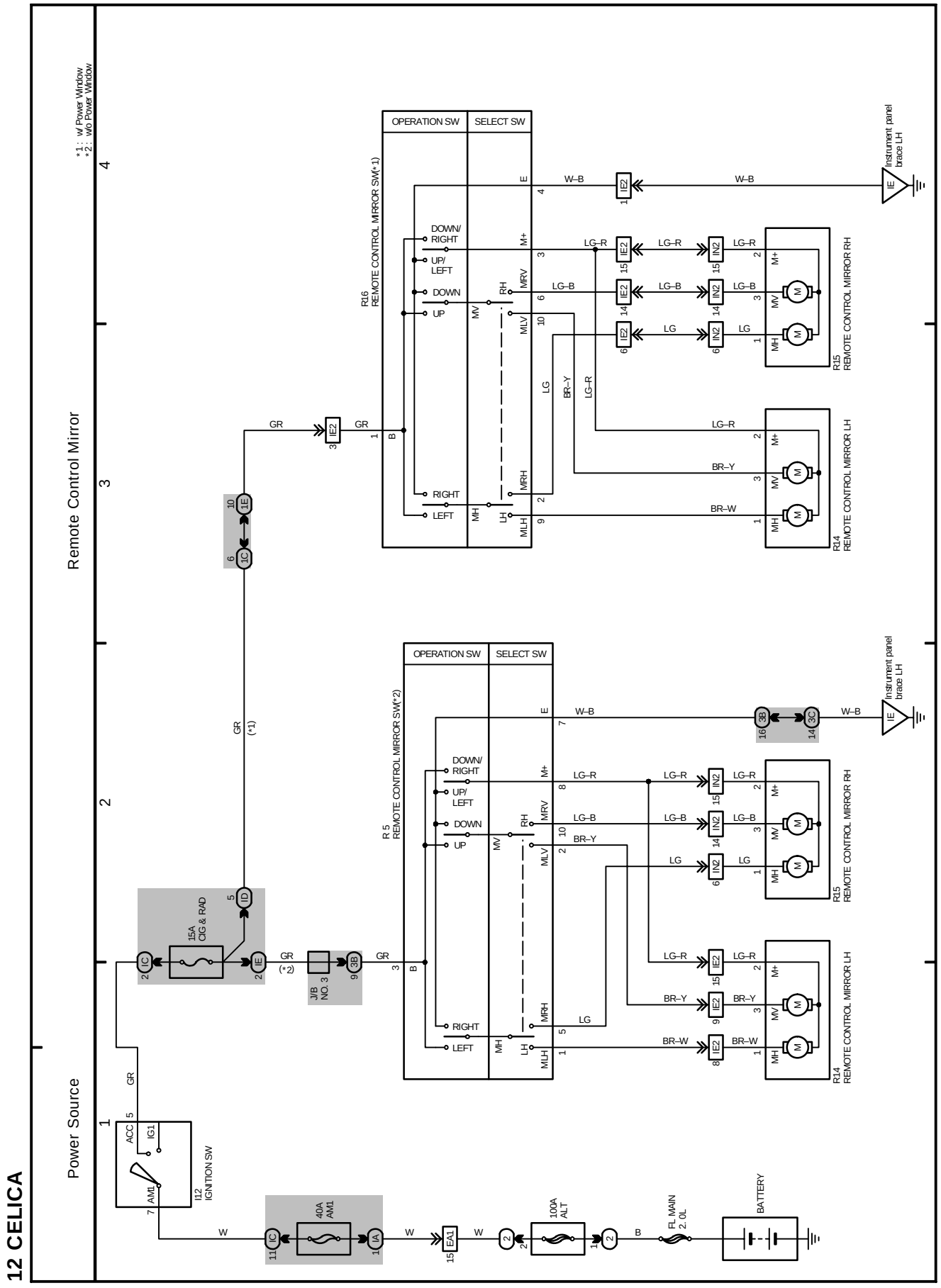

13 CELICA

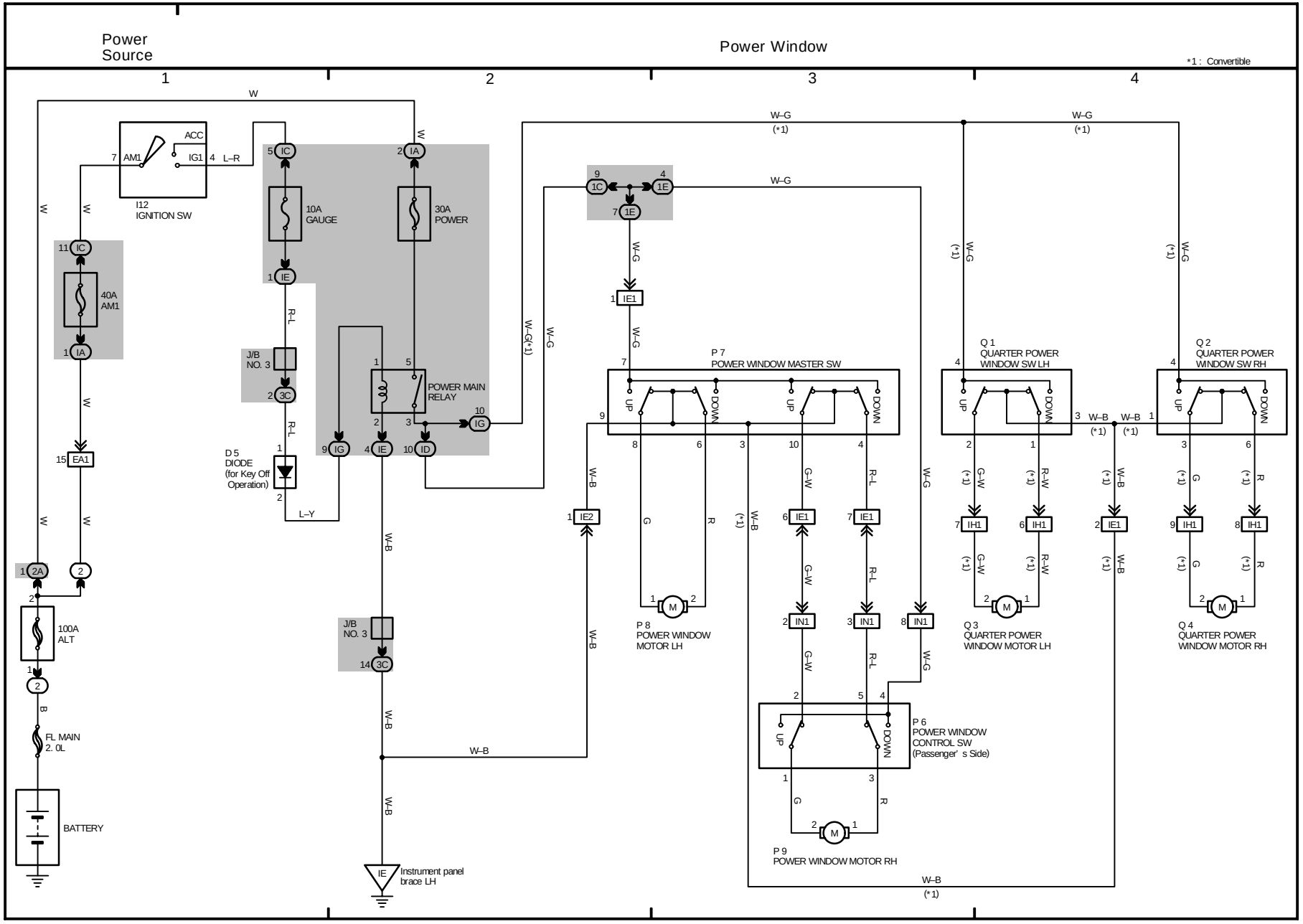

Power Source
Power Window
*1 : Convertible
1
2
3
4
I12 IGNITION SW
ACC
AM1
IG1
L–R
10A GAUGE
30A POWER
40A AM1
J/B NO. 3
POWER MAIN RELAY
D 5 DIODE (for Key Off Operation)
L–Y
EA1
100A ALT
FL MAIN 2. 0L
BATTERY
Instrument panel brace LH
P 7 POWER WINDOW MASTER SW
P 8 POWER WINDOW MOTOR LH
P 6 POWER WINDOW CONTROL SW (Passenger' s Side)
P 9 POWER WINDOW MOTOR RH
Q 1 QUARTER POWER WINDOW SW LH
Q 2 QUARTER POWER WINDOW SW RH
Q 3 QUARTER POWER WINDOW MOTOR LH
Q 4 QUARTER POWER WINDOW MOTOR RH
UP
DOWN
W–G
W–B
(*1)

OVERALL ELECTRICAL WIRING DIAGRAM

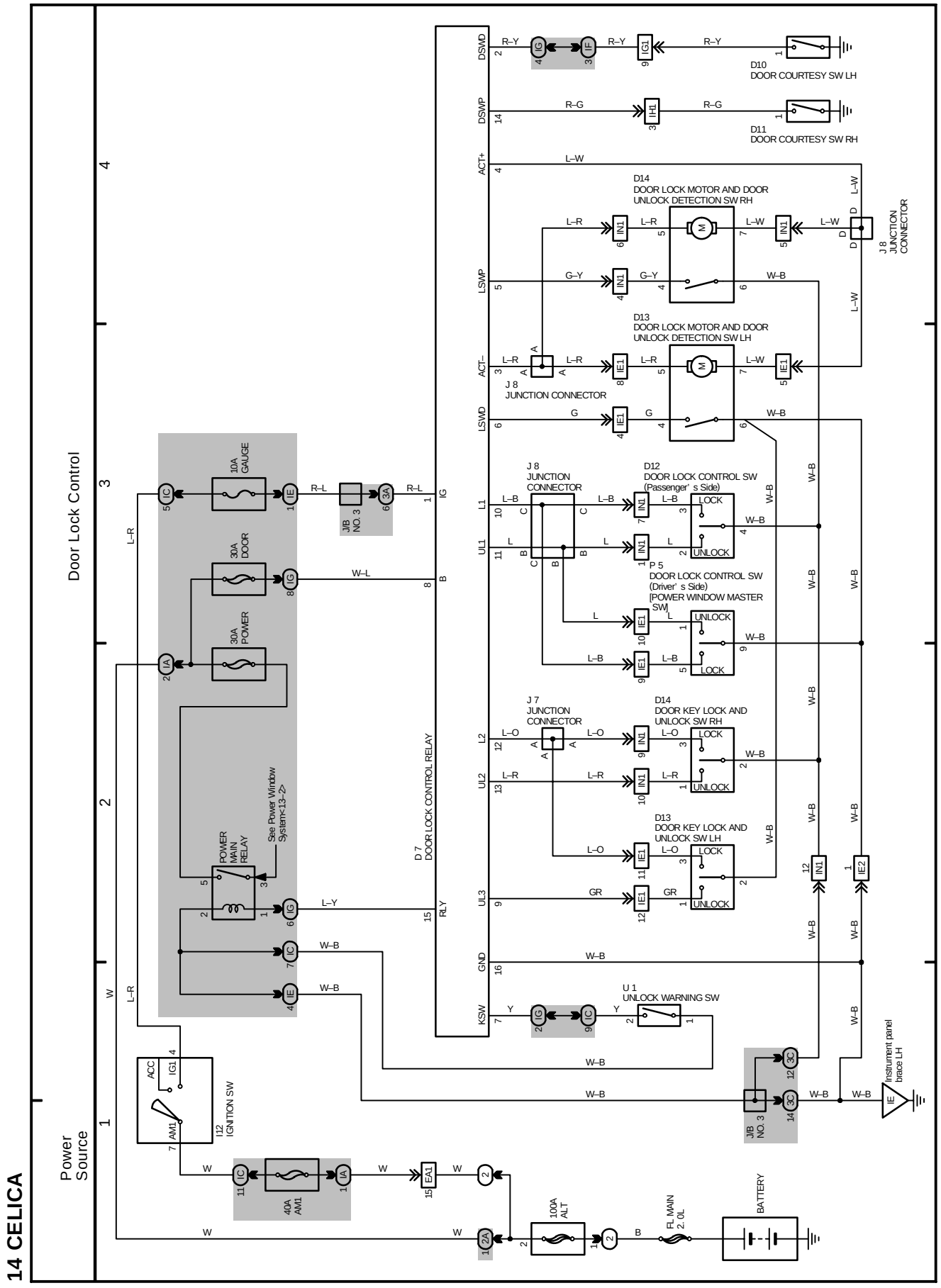

15 CELICA

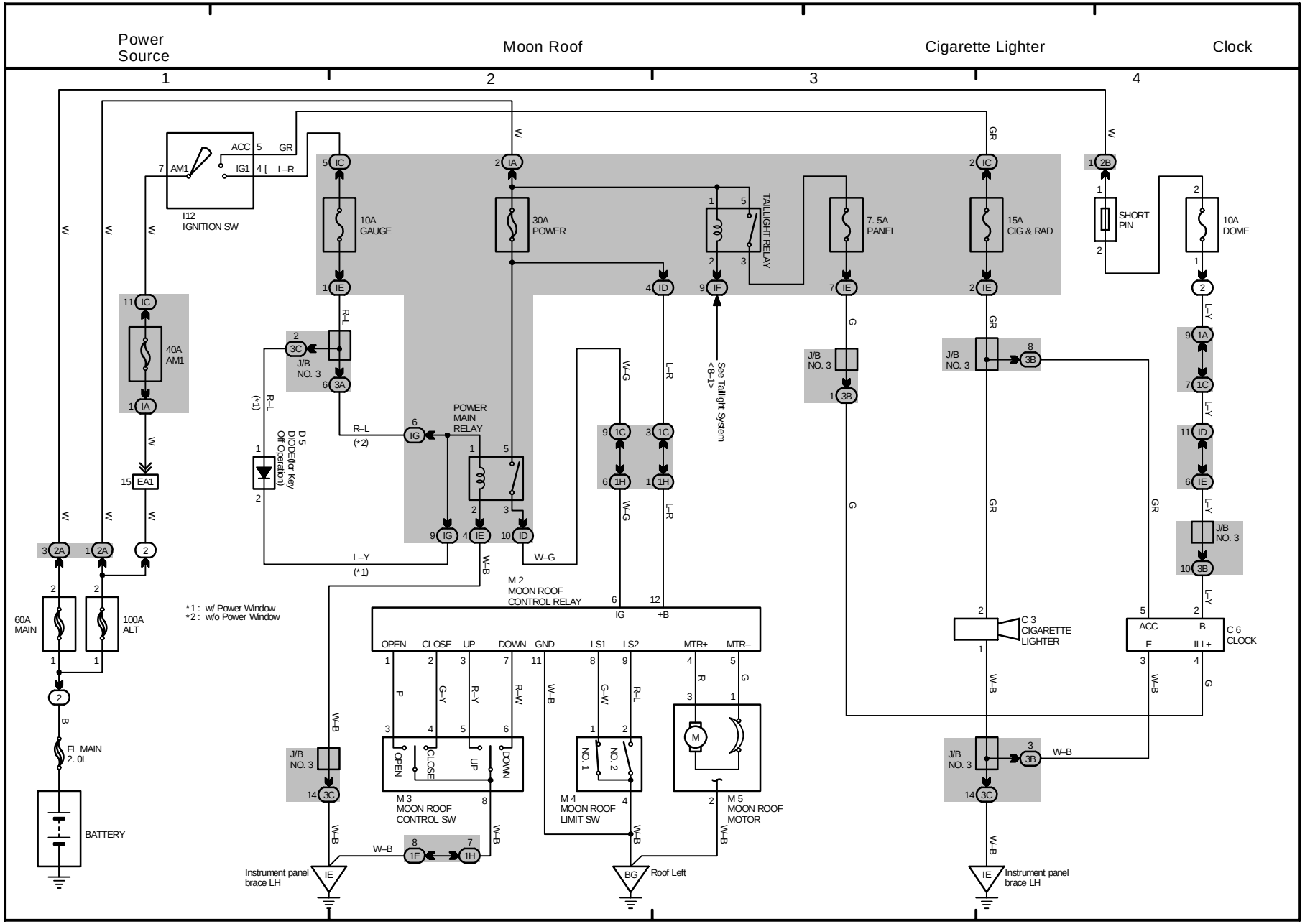
Power Source
Moon Roof
Cigarette Lighter
Clock
1
2
3
4
I12 IGNITION SW
ACC
IG1
AM1
10A GAUGE
30A POWER
TAILLIGHT RELAY
7. 5A PANEL
15A CIG & RAD
SHORT PIN
10A DOME
40A AM1
J/B NO. 3
POWER MAIN RELAY
D 5 DIODE(for Key Off Operation)
See Taillight System <8–1>
60A MAIN
100A ALT
FL MAIN 2. 0L
BATTERY
*1 : w/ Power Window
*2 : w/o Power Window
M 2 MOON ROOF CONTROL RELAY
OPEN
CLOSE
UP
DOWN
GND
LS1
LS2
MTR+
MTR–
M 3 MOON ROOF CONTROL SW
M 4 MOON ROOF LIMIT SW
M 5 MOON ROOF MOTOR
C 3 CIGARETTE LIGHTER
C 6 CLOCK
Instrument panel brace LH
Roof Left

OVERALL ELECTRICAL WIRING DIAGRAM

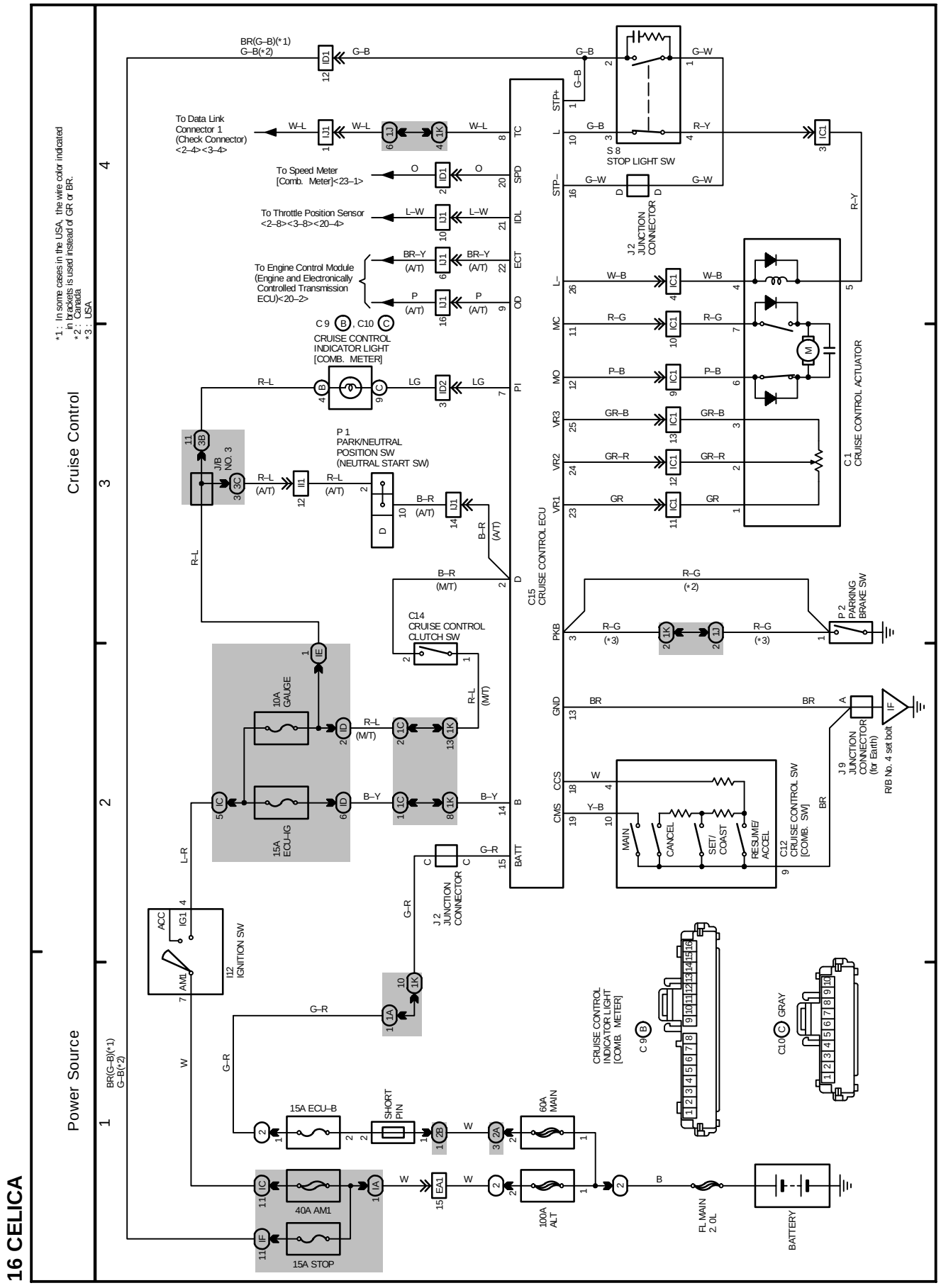

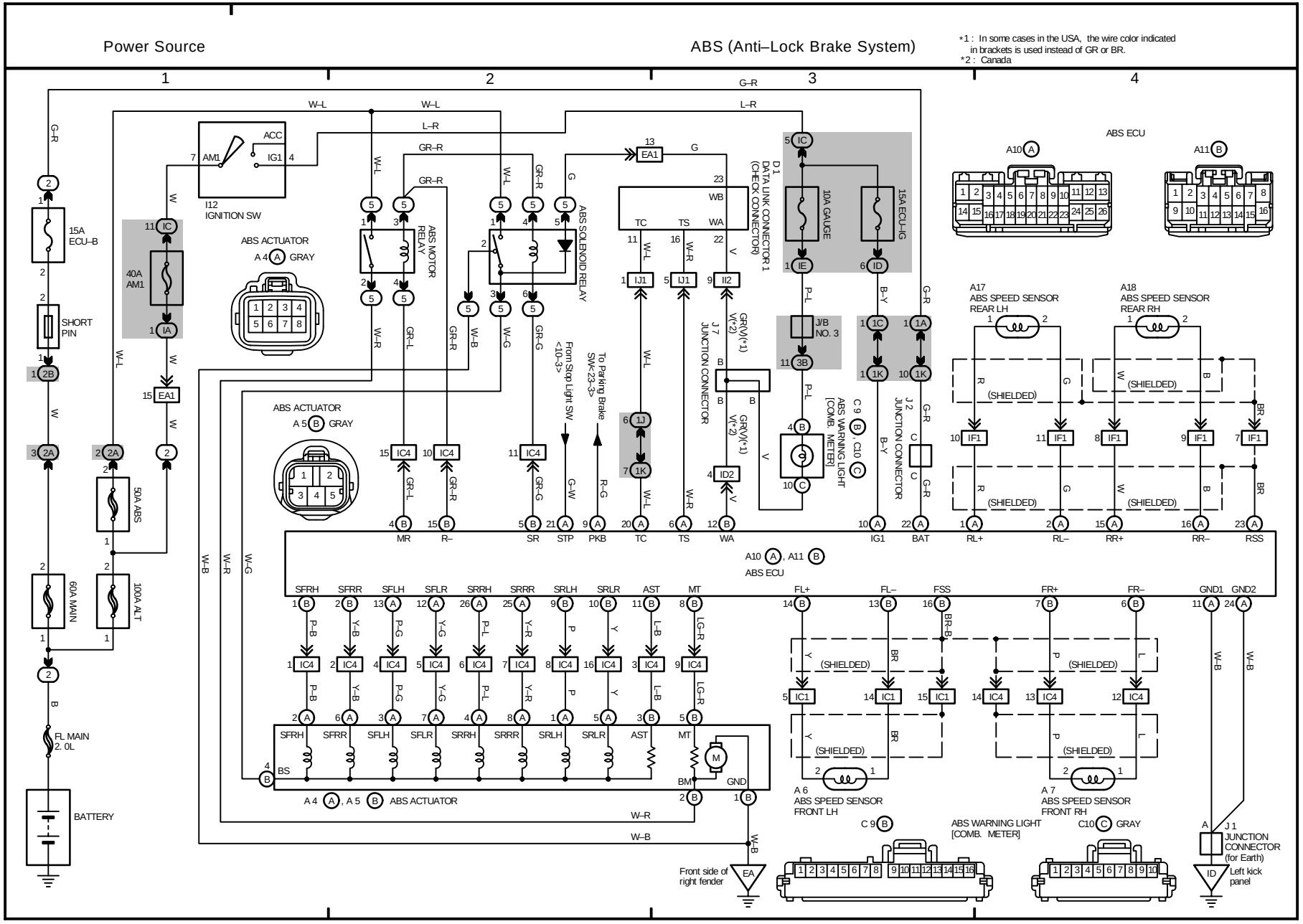
Power Source
ABS (Anti–Lock Brake System)
*1 : In some cases in the USA, the wire color indicated in brackets is used instead of GR or BR.
*2 : Canada
1
2
3
4
15A ECU–B
40A AM1
SHORT PIN
50A ABS
60A MAIN
100A ALT
FL MAIN 2. 0L
BATTERY
I12 IGNITION SW
ACC
IG1
AM1
ABS ACTUATOR
A 4 (A) GRAY
ABS MOTOR RELAY
ABS SOLENOID RELAY
ABS ACTUATOR
A 5 (B) GRAY
From Stop Light SW <10-3>
To Parking Brake SW<23-3>
D1 DATA LINK CONNECTOR 1 (CHECK CONNECTOR)
10A GAUGE
15A ECU–IG
J/B NO. 3
J7 JUNCTION CONNECTOR
J2 JUNCTION CONNECTOR
ABS WARNING LIGHT [COMB. METER]
C 9 (B) , C10 (C)
ABS ECU
A10 (A) A11 (B)
A17 ABS SPEED SENSOR REAR LH
A18 ABS SPEED SENSOR REAR RH
(SHIELDED)
A 6 ABS SPEED SENSOR FRONT LH
A 7 ABS SPEED SENSOR FRONT RH
C10 (C) GRAY
J1 JUNCTION CONNECTOR (for Earth)
Left kick panel
Front side of right fender
A4 (A) , A5 (B) ABS ACTUATOR
MR
R–
SR
STP
PKB
TC
TS
WA
IG1
BAT
RL+
RL–
RR+
RR–
RSS
SFRH
SFRR
SFLH
SFLR
SRRH
SRRR
SRLH
SRLR
AST
MT
FL+
FL–
FSS
FR+
FR–
GND1
GND2
BS
BM
GND

OVERALL ELECTRICAL WIRING DIAGRAM

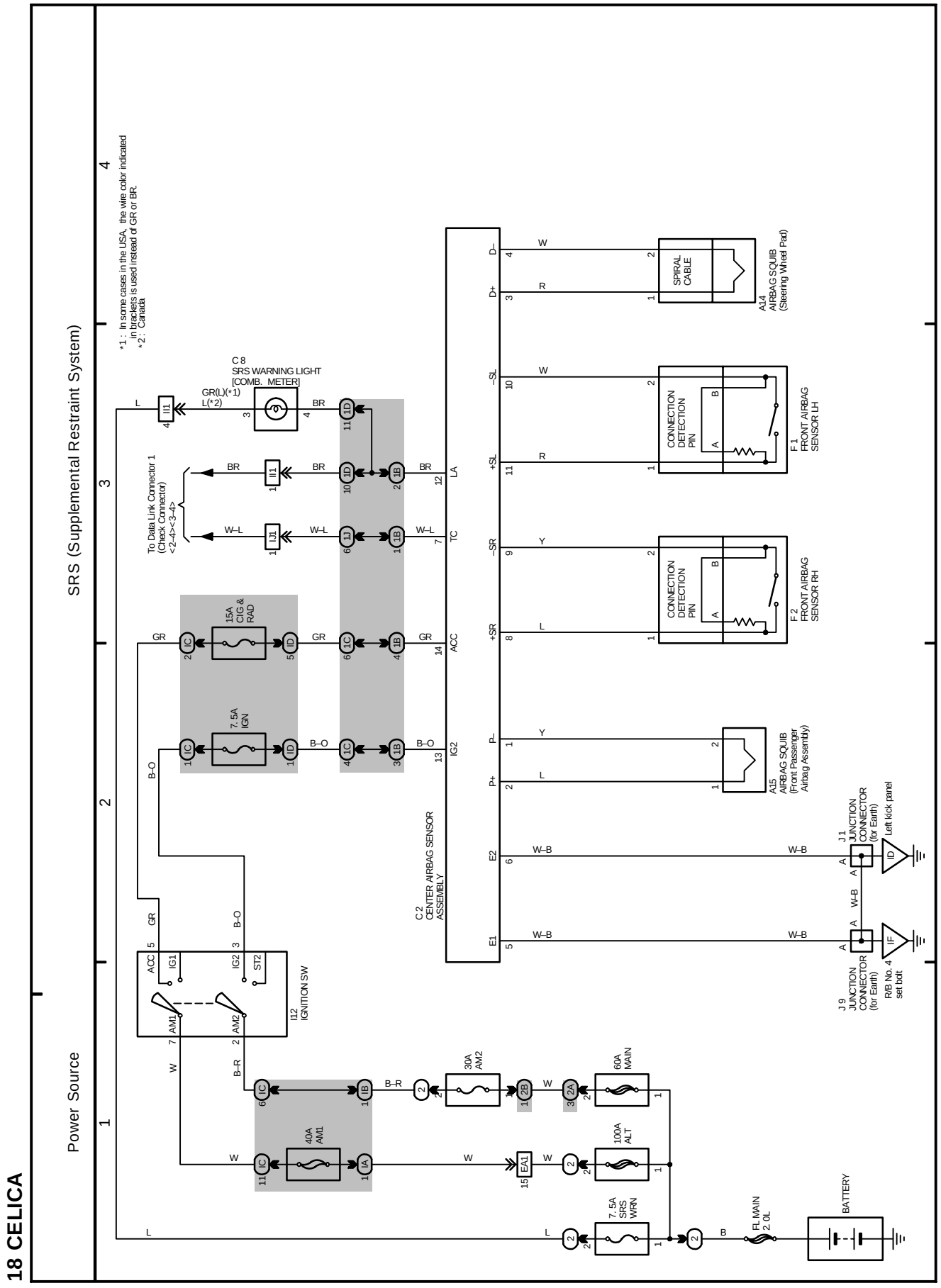

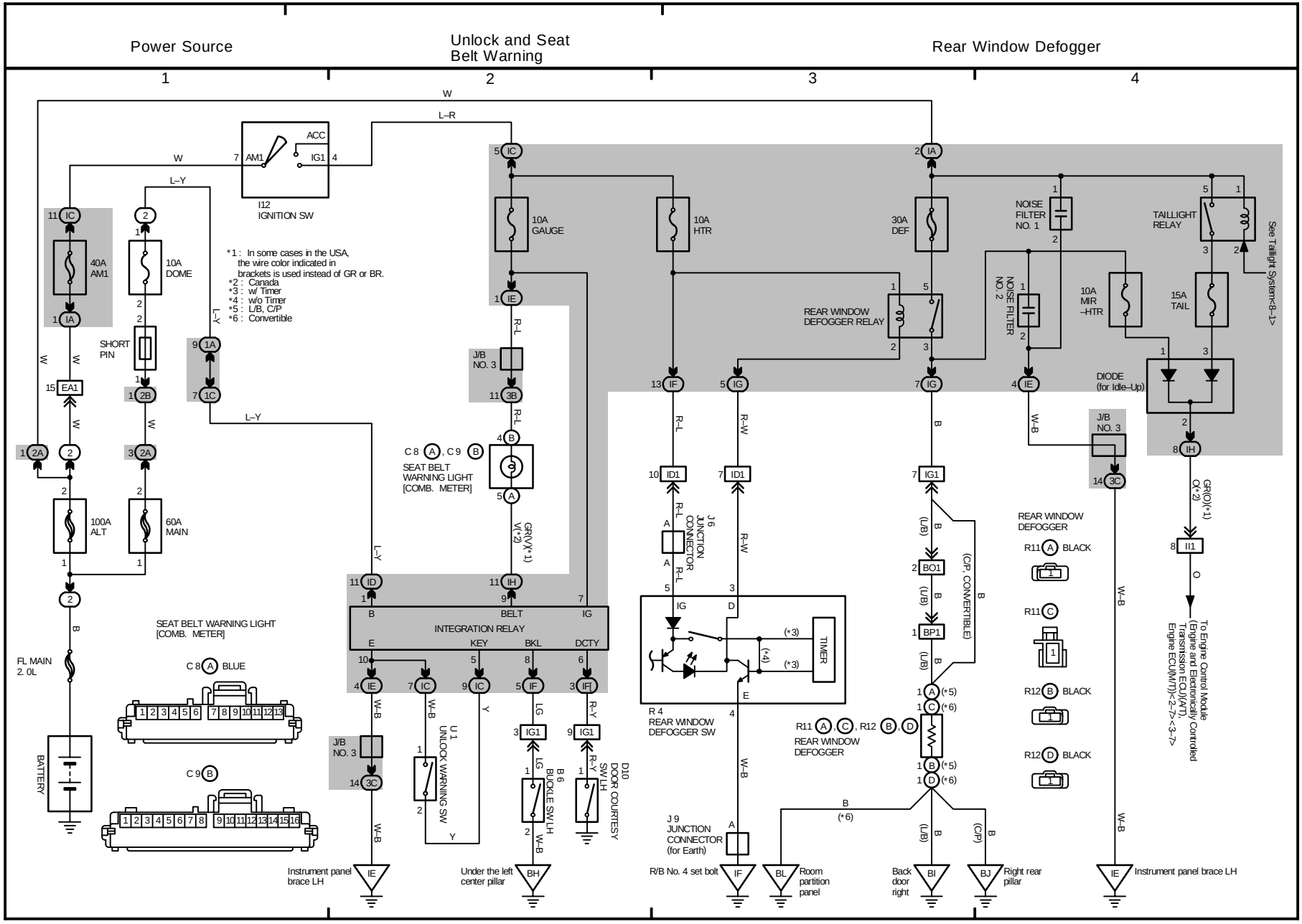
Power Source
Unlock and Seat Belt Warning
Rear Window Defogger
1
2
3
4
W
L–R
ACC
IG1
AM1
I12
IGNITION SW
L–Y
40A AM1
10A DOME
SHORT PIN
100A ALT
60A MAIN
FL MAIN 2. 0L
BATTERY
*1 : In some cases in the USA, the wire color indicated in brackets is used instead of GR or BR.
*2 : Canada
*3 : w/ Timer
*4 : w/o Timer
*5 : L/B, C/P
*6 : Convertible
10A GAUGE
10A HTR
30A DEF
NOISE FILTER NO. 1
NOISE FILTER NO. 2
TAILLIGHT RELAY
See Taillight System<8–1>
REAR WINDOW DEFOGGER RELAY
10A MIR –HTR
15A TAIL
DIODE (for Idle–Up)
J/B NO. 3
SEAT BELT WARNING LIGHT [COMB. METER]
INTEGRATION RELAY
BELT
KEY
BKL
DCTY
IG
TIMER
R 4 REAR WINDOW DEFOGGER SW
J6 JUNCTION CONNECTOR
J 9 JUNCTION CONNECTOR (for Earth)
REAR WINDOW DEFOGGER
R11 BLACK
R12 BLACK
U 1 UNLOCK WARNING SW
B 6 BUCKLE SW LH
D10 DOOR COURTESY SW LH
To Engine Control Module (Engine and Electronically Controlled Transmission ECU)(A/T) Engine ECU(M/T)<2-7><3-7>
Instrument panel brace LH
Under the left center pillar
R/B No. 4 set bolt
Room partition panel
Back door right
Right rear pillar
Instrument panel brace LH

OVERALL ELECTRICAL WIRING DIAGRAM

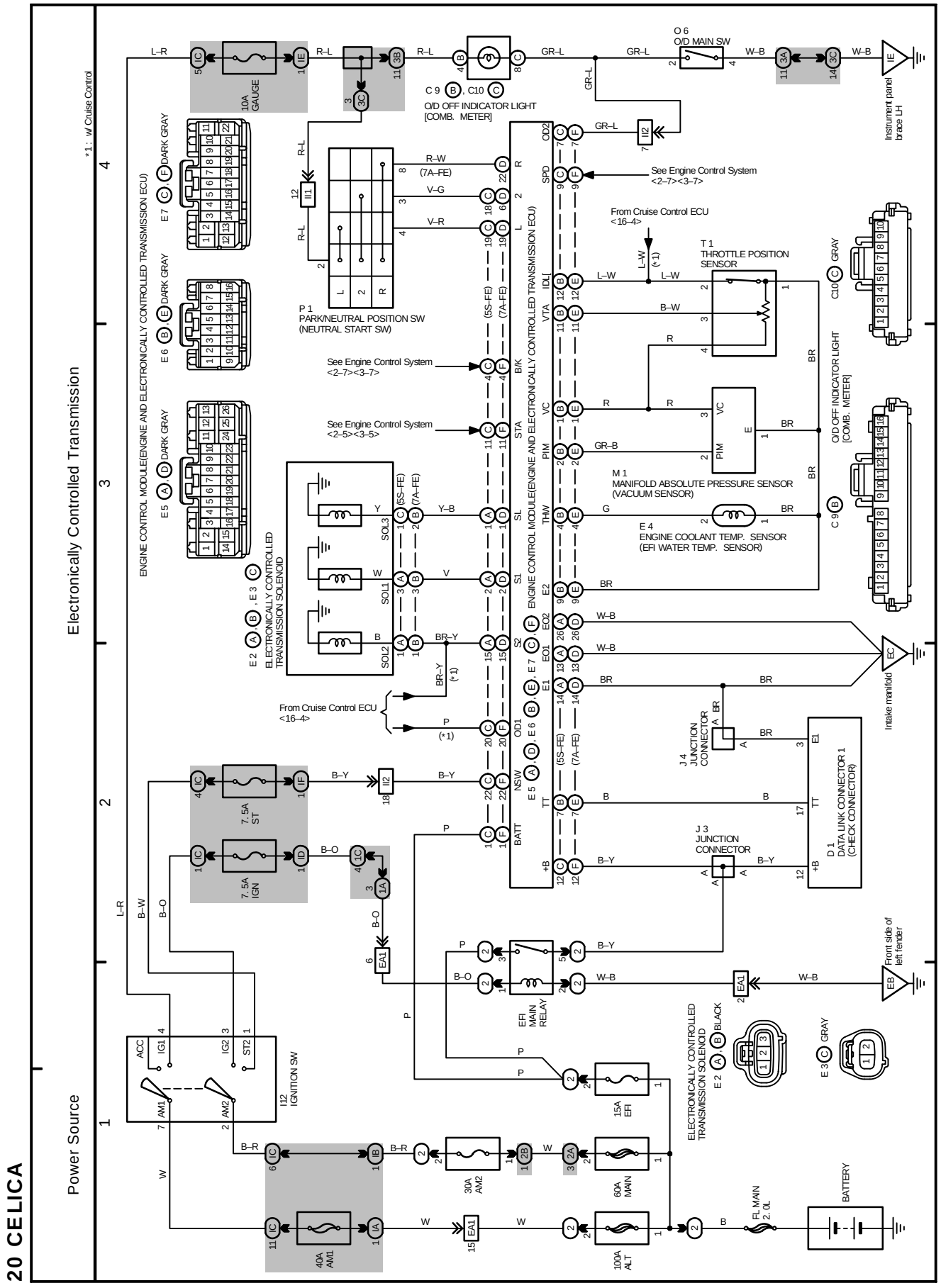

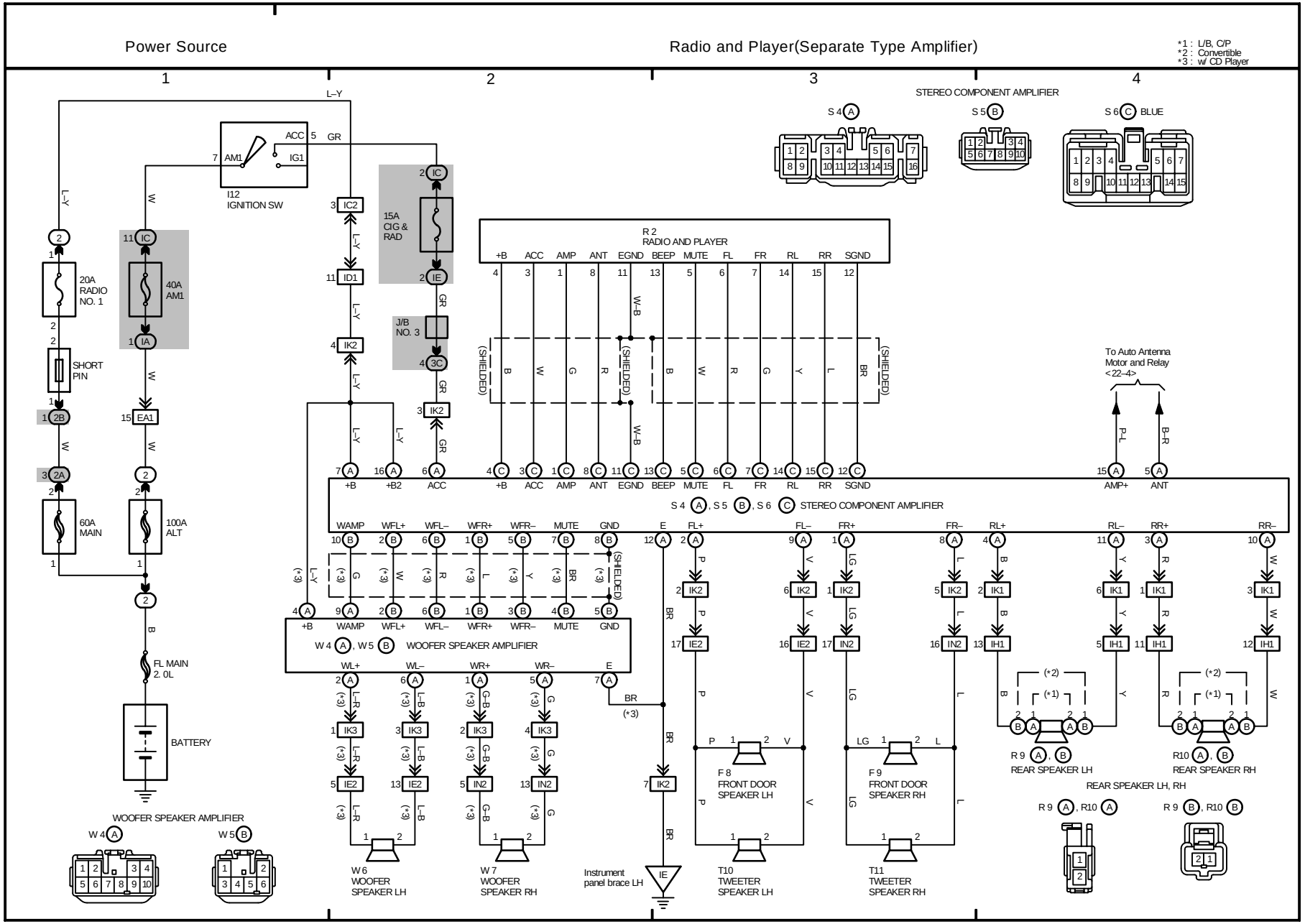
Power Source
Radio and Player(Separate Type Amplifier)
*1 : L/B, C/P
*2 : Convertible
*3 : w/ CD Player
1
2
3
4
STEREO COMPONENT AMPLIFIER
S 4 A
S 5 B
S 6 C BLUE
L–Y
ACC 5 GR
7 AM1 IG1
I12
IGNITION SW
15A
CIG &
RAD
J/B
NO. 3
20A
RADIO
NO. 1
40A
AM1
SHORT
PIN
60A
MAIN
100A
ALT
FL MAIN
2. 0L
BATTERY
R 2
RADIO AND PLAYER
+B ACC AMP ANT EGND BEEP MUTE FL FR RL RR SGND
(SHIELDED)
To Auto Antenna
Motor and Relay
<22–4>
AMP+ ANT
S 4 A, S 5 B, S 6 C STEREO COMPONENT AMPLIFIER
WAMP WFL+ WFL– WFR+ WFR– MUTE GND E FL+ FL– FR+ FR– RL+ RL– RR+ RR–
W 4 A, W 5 B WOOFER SPEAKER AMPLIFIER
WL+ WL– WR+ WR– E
WOOFER SPEAKER AMPLIFIER
W 6
WOOFER
SPEAKER LH
W 7
WOOFER
SPEAKER RH
Instrument
panel brace LH
F 8
FRONT DOOR
SPEAKER LH
F 9
FRONT DOOR
SPEAKER RH
T10
TWEETER
SPEAKER LH
T11
TWEETER
SPEAKER RH
R 9 A, B
REAR SPEAKER LH
R10 A, B
REAR SPEAKER RH
REAR SPEAKER LH, RH
R 9 A, R10 A
R 9 B, R10 B

OVERALL ELECTRICAL WIRING DIAGRAM

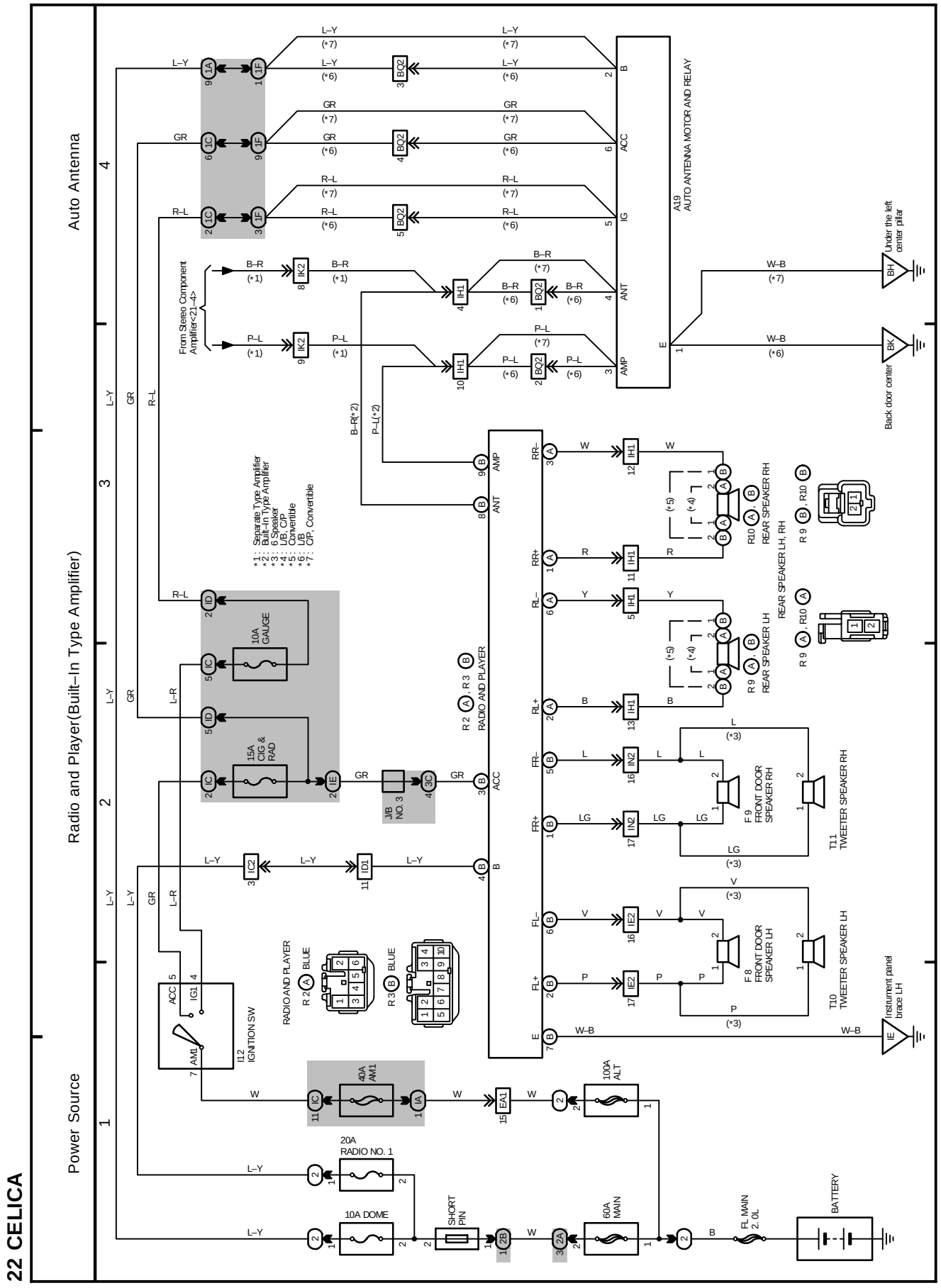

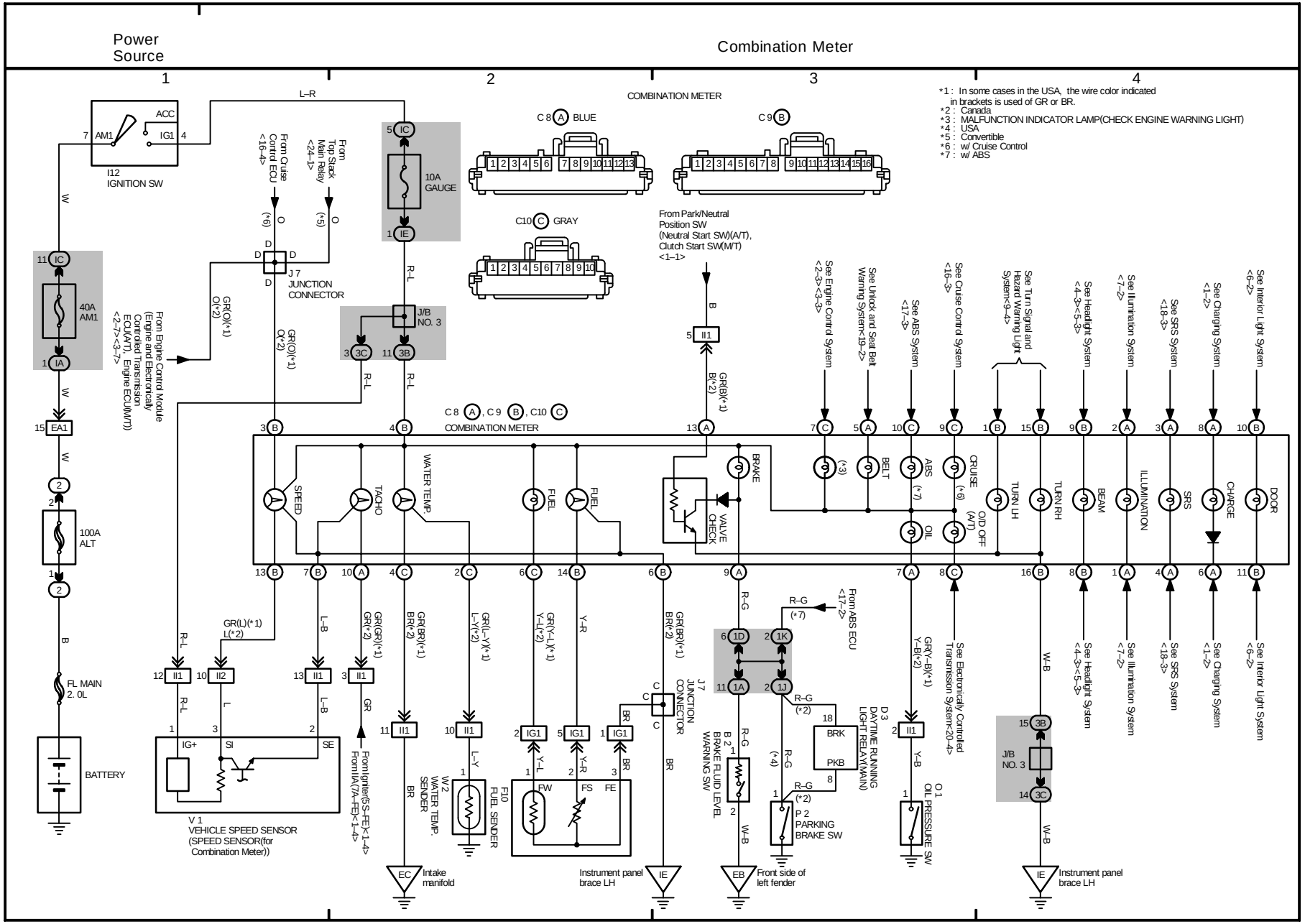
Power Source
Combination Meter
1
2
3
4
COMBINATION METER
*1 : In some cases in the USA, the wire color indicated in brackets is used of GR or BR.
*2 : Canada
*3 : MALFUNCTION INDICATOR LAMP(CHECK ENGINE WARNING LIGHT)
*4 : USA
*5 : Convertible
*6 : w/ Cruise Control
*7 : w/ ABS
I12 IGNITION SW
ACC
IG1
AM1
10A GAUGE
40A AM1
100A ALT
FL MAIN 2. 0L
BATTERY
J 7 JUNCTION CONNECTOR
J/B NO. 3
From Cruise Control ECU <16-4>
From Top Stack Main Relay <24-1>
From Engine Control Module (Engine and Electronically Controlled Transmission ECU(A/T), Engine ECU(M/T)) <2-7><3-7>
From Park/Neutral Position SW (Neutral Start SW)(A/T), Clutch Start SW(M/T) <1-1>
See Engine Control System <2-3><3-3>
See Unlock and Seat Belt Warning System<19-2>
See ABS System <17-3>
See Cruise Control System <16-3>
See Turn Signal and Hazard Warning Light System<9-4>
See Headlight System <4-3><5-3>
See Illumination System <7-2>
See SRS System <18-3>
See Charging System <1-2>
See Interior Light System <6-2>
SPEED
TACHO
WATER TEMP.
FUEL
FUEL
BRAKE
VALVE CHECK
(*3)
BELT
ABS (*7)
OIL
CRUISE (*6)
O/D OFF (A/T)
TURN LH
TURN RH
BEAM
ILLUMINATION
SRS
CHARGE
DOOR
V 1 VEHICLE SPEED SENSOR (SPEED SENSOR(for Combination Meter))
W 2 WATER TEMP. SENDER
F10 FUEL SENDER
B 2 BRAKE FLUID LEVEL WARNING SW
P 2 PARKING BRAKE SW
D 3 DAYTIME RUNNING LIGHT RELAY(MAIN)
O 1 OIL PRESSURE SW
From ABS ECU <17-2>
See Electronically Controlled Transmission System<20-4>
From Ignitor(5S-FE)<1-4> From IIA(7A-FE)<1-4>
EC Intake manifold
IE Instrument panel brace LH
EB Front side of left fender
IE Instrument panel brace LH

OVERALL ELECTRICAL WIRING DIAGRAM

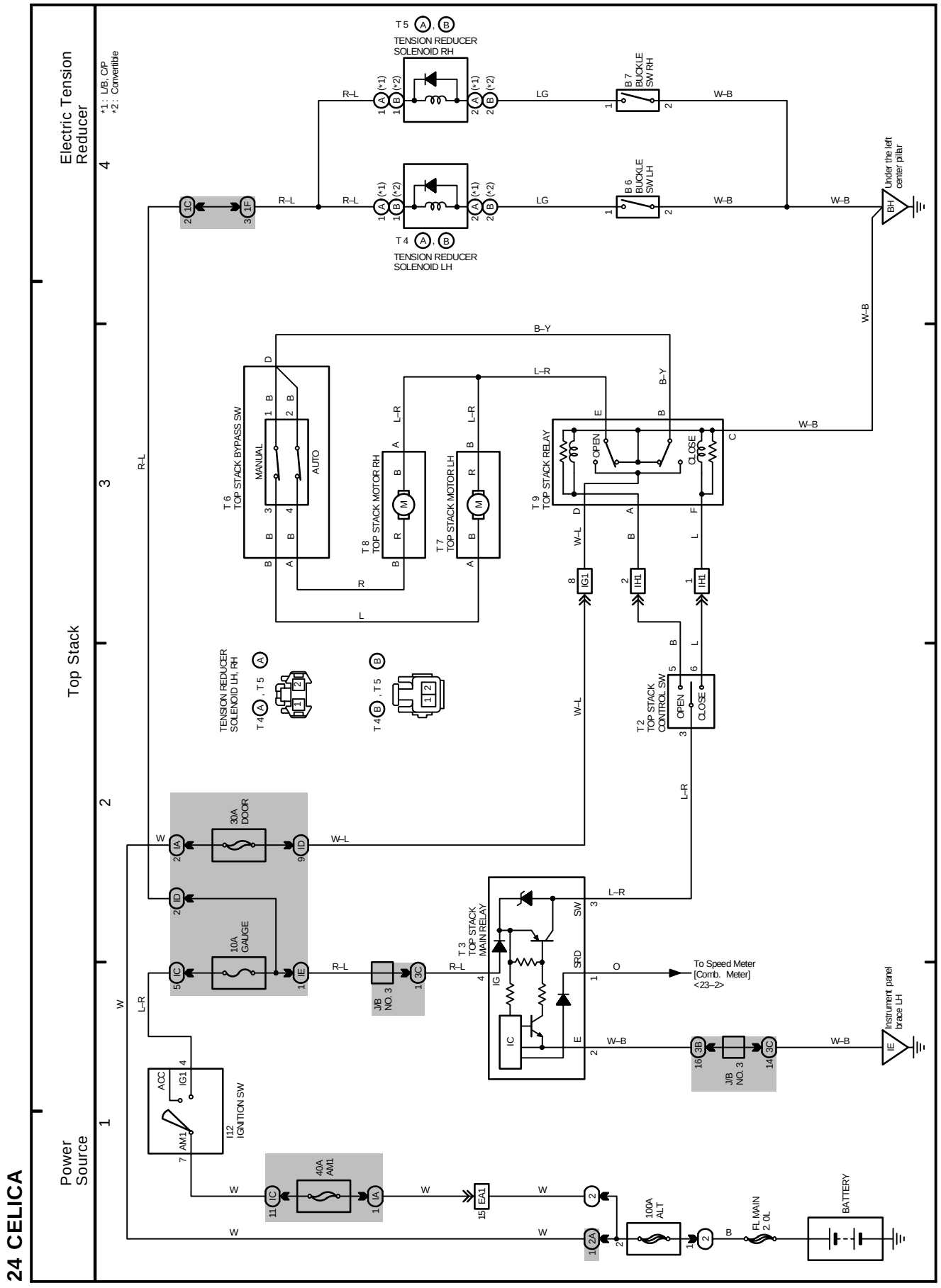

25 CELICA

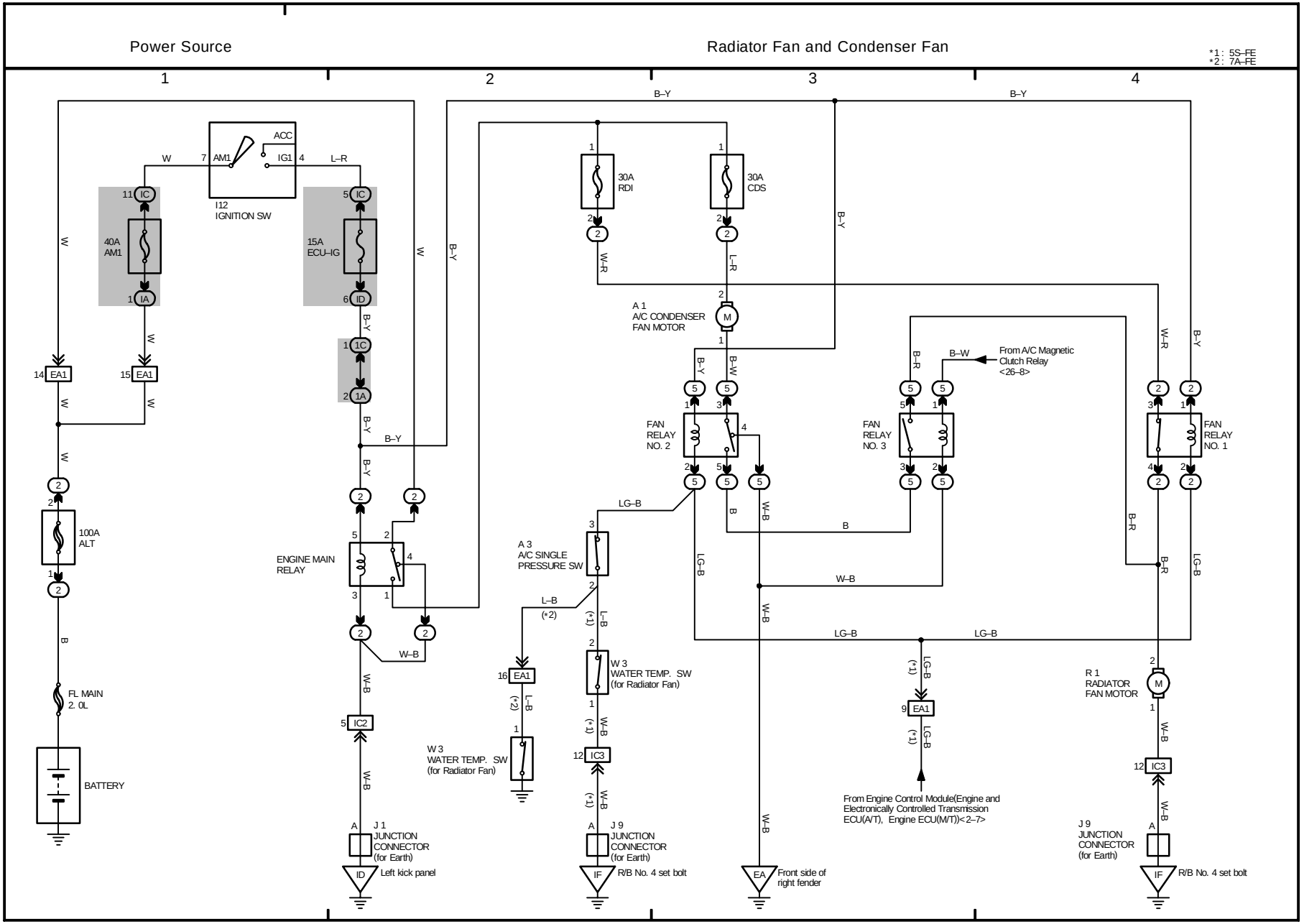

Power Source
Radiator Fan and Condenser Fan
*1: 5S–FE
*2: 7A–FE
1
2
3
4
I12
IGNITION SW
ACC
AM1
IG1
40A
AM1
15A
ECU–IG
100A
ALT
FL MAIN
2. 0L
BATTERY
ENGINE MAIN
RELAY
J 1
JUNCTION
CONNECTOR
(for Earth)
Left kick panel
30A
RDI
30A
CDS
A 1
A/C CONDENSER
FAN MOTOR
FAN
RELAY
NO. 2
FAN
RELAY
NO. 3
FAN
RELAY
NO. 1
From A/C Magnetic
Clutch Relay
<26–8>
A 3
A/C SINGLE
PRESSURE SW
W 3
WATER TEMP. SW
(for Radiator Fan)
W 3
WATER TEMP. SW
(for Radiator Fan)
J 9
JUNCTION
CONNECTOR
(for Earth)
R/B No. 4 set bolt
Front side of
right fender
From Engine Control Module(Engine and
Electronically Controlled Transmission
ECU(A/T), Engine ECU(M/T))<2–7>
R 1
RADIATOR
FAN MOTOR
J 9
JUNCTION
CONNECTOR
(for Earth)
R/B No. 4 set bolt

OVERALL ELECTRICAL WIRING DIAGRAM

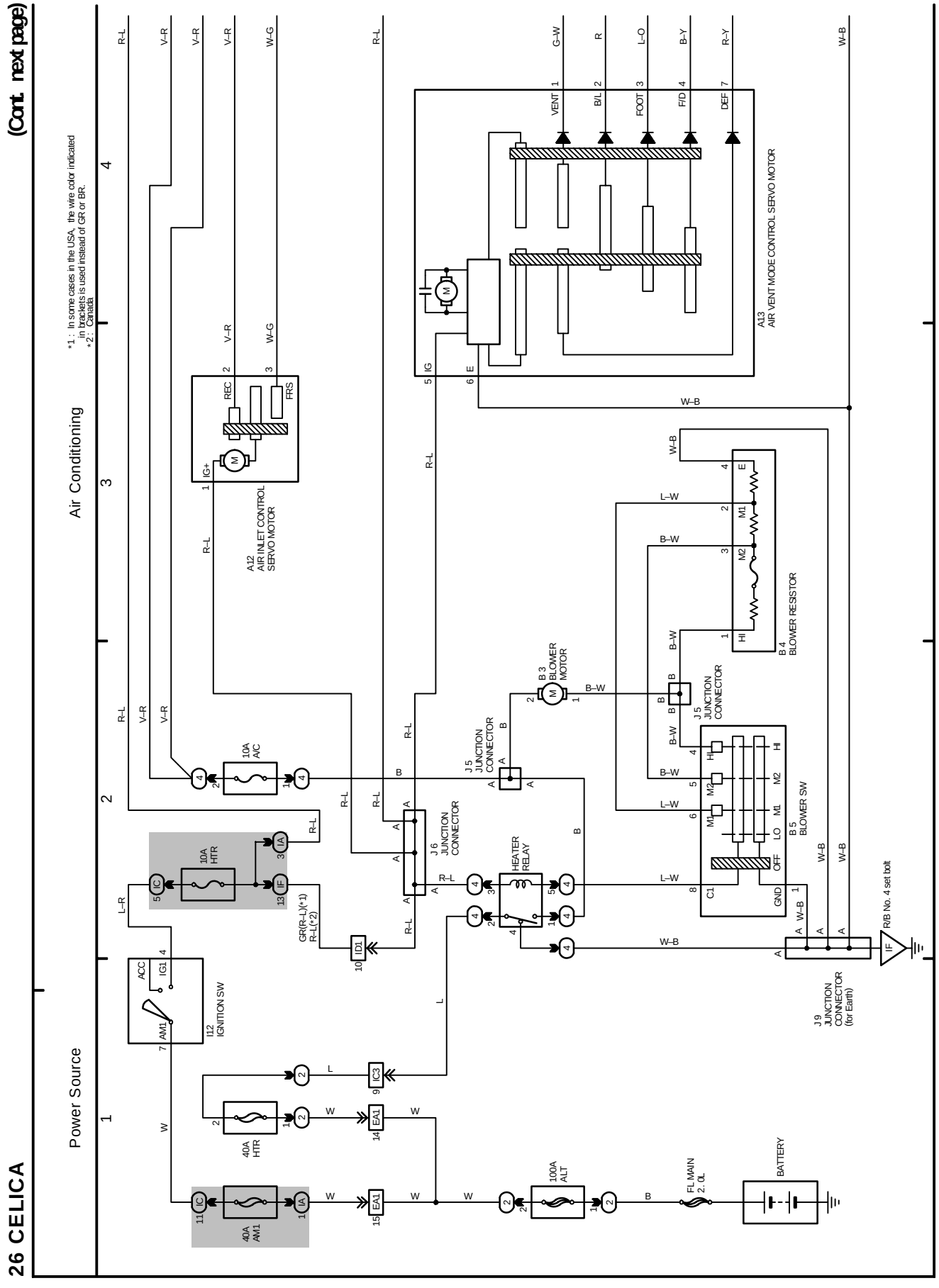

26 CELICA (Cont'd)

